ILLINOIS MUNICIPAL ELECTRIC AGENCY

POWER SALES CONTRACT

This Contract entered into as of the 11 day of MARCH, 2003, between ILLINOIS MUNICIPAL ELECTRIC AGENCY ("IMEA" or "Agency"), a body politic and corporate, municipal corporation and unit of local government of the State of Illinois, and the VILLAGE OF CHATHAM, ILLINOIS ("Member"), a municipal corporation created and existing under the laws of the State of Illinois.

W I T N E S S E T H:

WHEREAS, Public Act 83-997 (the "Act") enables municipalities owning and operating electric utilities, furnishing retail electric service to the public to jointly plan, finance, own and operate electric generation and transmission facilities; and

WHEREAS, pursuant to the Act, 40 such municipalities have joined together to form IMEA to acquire and construct projects or participate in projects with investor-owned utilities, generation and transmission cooperatives and others which may be used or useful in the generation, production, distribution, transmission, purchase, sale, exchange or interchange of electric energy; and

WHEREAS, under the Act the Member is a municipality owning or operating an electric utility which furnishes retail electric service to the public and may enter into and carry out contracts and agreements for the purchase from IMEA of power supply and energy transmission services, power supply development services and other services; and

WHEREAS, in order to secure an adequate, reliable and economic long term supply of electrical power and energy for the Member, IMEA and Member hereby enter into this Power Sales Contract under the terms of which the Agency will sell to the Member and the Member will purchase from the Agency all of the Member's power and energy requirements and transmission services.

NOW, THEREFORE, for and in consideration of the premises and the mutual covenants and agreements set forth in this Contract, the Agency and the Member agree as follows:

Definitions

The following terms shall, for all purposes of this Contract, have the following meanings unless the context expressly or by necessary implication requires otherwise:

"Board of Directors" shall mean the corporate authority of the Agency with powers as provided in the Act.

"Bonds" shall mean any revenue bonds, notes and other evidences of obligations of the Agency issued under the provisions of the Act to finance any cost, expense or liability relating to the Power Supply System or service under the Power Sales Contracts.

"Bond Ordinance" shall mean any one or more ordinances, resolutions, indentures or other similar instruments of the Agency providing for the issuance of Bonds.

"Delivery Point" shall mean a presently existing metered connection or connections of IMEA's or another party's transmission or distribution system with Member's transmission or distribution system as set forth in Schedule A or a new connection as Member may request and IMEA or another party is willing to provide in the future.

"Member" shall be the city, village or town executing this Contract.

"Participating Members" shall mean those Members that are or hereafter become parties to Power Sales Contracts, as defined below.

"Party" shall mean a party to this Contract and its successors and permitted assigns.

"Point of Measurement" shall mean any point at which metering equipment is located for purposes of measuring power and energy deliveries to the Member as set forth in Schedule A hereof as amended from time to time.

"Power Sales Contracts" shall mean this Contract and other contracts providing for the sale of power and energy by IMEA to the other Participating Members as amended from time to time (excepting therefrom the contracts entered into by the Agency and Participating Members for power supplies which are specifically superseded by the Power Sales Contracts and any other contracts which the Agency designates as being excepted).

"Power Supply System" shall be broadly construed to mean, encompass and include all Projects and all electric production, transmission, distribution, conservation, load management, general plant and related facilities, equipment or property, and any mine, well, pipeline, plant, structure or other facility for the development, production, manufacture, storage, transportation, fabrication or processing of fossil, nuclear or other fuel of any kind or any facility or rights with respect to the supply of water, in each case for use, in whole or in major part, in any of the Agency's generating plants, now existing and hereafter acquired by lease, contract, purchase or otherwise or constructed by the Agency, including any interest or participation of the Agency in any such facilities or any rights to the output or capacity thereof, together with all additions, betterments, extensions and improvements to said Power Supply System or any part thereof hereafter made and together with all lands, easements and rights-of-way of the Agency and all other works, property or structures of the Agency and contract rights and other tangible and intangible assets of the Agency used or useful in connection with or related to said Power Supply System, including without limitation a contract right or other contractual arrangement for the long term or short term interconnection, interchange, exchange, pooling, wheeling, transmission,

purchase or sale of electric power and energy and other similar arrangements with entities having generation and transmission capabilities and located within or without the State of Illinois. Power Supply System shall not include (1) any properties or interest in properties of the Member, except with respect to any contract rights the Agency may have in such properties pursuant to any contract between the Member and the Agency other than this Contract, and (2) any properties or interest in properties of the Agency which the Board of Directors determines shall not constitute a part of the Power Supply System for the purposes of the Power Supply Contracts with the Participating Members.

"Project" means (i) any plant, works, system, facility, and real and personal property of any nature whatsoever, together with all parts thereof and appurtenances thereto, used or useful in the generation, production, distribution, transmission, purchase, sale, exchange or interchange of electrical energy and in the acquisition, extraction, conversion, transportation, storage or reprocessing of fuel of any kind for any such purposes, or (ii) any interest in, or right to the use, services, output or capacity, of any such plant, works, system or facilities.

"Prudent Utility Practice" shall mean, any of the practices, methods and acts which, in the exercise of reasonable judgment and in light of the facts (including, but not limited to, any practices, methods and acts engaged in or approved by a significant portion of electrical utility industry prior thereto) known at the time the decision was made, could have been expected to accomplish the desired result at reasonable cost consistent with reliability, safety and expediency. In applying the standard of Prudent Utility Practice to any matter under this Contract, equitable considerations shall be given to the circumstances, requirements and obligations of each of the Parties, and there shall be taken into account the fact that the Agency and the Member are both political subdivisions and municipal corporations of the State of Illinois with prescribed statutory powers, duties and responsibilities. Prudent Utility Practice is not intended to be limited to the optimum practice, method or acts to the exclusion of all others, but rather to a spectrum of possible practices, methods or acts which could have been expected to accomplish the desired result at reasonable cost consistent with reliability, safety and expediency. Prudent Utility Practice includes due regard for manufacturer's warranties and the requirements of governmental agencies which have jurisdiction.

"Rate Schedule" shall mean the rate schedule or schedules setting forth the rates and charges for payments by Participating Members, including the Member, for all services rendered by the Agency pursuant to the Power Sales Contracts. The exisitng Rate Schedules are Schedule B and Schedules B-2, B-3, B-4, B-5 and B-6 attached hereto as revised. The Rate Schedules may be revised from time to time by new schedules adopted by the Agency in the manner provided for in Section 3 of this Contract, including, without limitation, any amendment, change, deletion or addition to any of the rates and charges, billing components, terms or conditions, or any adjustment set forth therein, including, but not limited to, amending the billing demand provision to impose a minimum demand whether or not based on prior demand measurements, which schedules may be applicable to any one or more Participating Members.

"Revenue Requirements" shall mean all costs and expenses paid or incurred or to be paid or incurred by the Agency resulting from the ownership, operation, maintenance, termination,

retirement from service and decommissioning of, and repairs, renewals, replacements, additions, improvements, betterments and modifications to, the Power Supply System or otherwise relating to the acquisition and sale of power and energy, transmission, load management, conservation or related services hereunder and performance by the Agency of its obligations under the Power Sales Contracts for Participating Members, including, without limitation, the following items of cost:

(1) payments of principal of and premium, if any, and interest on all Bonds issued by the Agency and payments which the Agency is required to make into any debt service reserve fund or account under the terms of any Bond Ordinance or other contract with holders of Bonds; provided, however, that Revenue Requirements shall not include any principal of or premium, if any, or interest on Bonds due solely by virtue of the acceleration of the maturity of such Bonds;

(2) amounts required under any Bond Ordinance to be paid or deposited into any fund or account established by such Bond Ordinance (other than funds and accounts referred to in clause (1) above), including any amounts required to be paid or deposited by reason of the transfer of moneys from such funds or accounts to the funds or accounts referred to in clause (1) above including any Rate Stabilization Fund or Account;

(3) amounts which the Agency may be required to pay for the prevention or correction of any loss or damage to the Power Supply System or for renewals, replacements, repairs, additions, improvements, betterments, and modifications which are necessary to keep any facility of the Power Supply System, whether owned by the Agency or available to the Agency under any contract, in good operating condition or to prevent a loss of revenues therefrom;

(4) costs of operating and maintaining the Power Supply System and of producing and delivering power and energy therefrom (including, without limitation, fuel costs, administrative and general expenses and working capital, for fuel or otherwise, regulatory costs (including but not limited to wholesale rate case intervention costs), insurance premiums, and taxes or payments in lieu thereof) not included in the costs specified in the other items of this definition, costs of power supply and demand-side planning and implementation associated with meeting the Agency's power supply obligations and costs of load management and conservation;

(5) the cost of any electric power and energy purchased for resale by the Agency to the Participating Members and the costs of transmission, scheduling, dispatching and controlling services for delivery of electric power and energy under the Power Sales Contracts for Participating Members;

(6) all costs incurred or associated with the salvage, discontinuance, decommissioning and disposition or sale of properties;

(7) all costs, settlements and expenses relating to injury and damage claims asserted against the Agency;

(8) any additional cost or expense not specified in the other items of this definition imposed or permitted by any regulatory agency or which is paid or incurred by the Agency relating to the Power Supply System or relating to the provision of services to Participating Members (including any amounts to be paid into any reserve account established by the Agency under the terms of any Bond Ordinance for the payment of Revenue Requirements in the future and any provision for depreciation) which is not otherwise included in any of the costs specified herein;

(9) amounts required to be paid by the Agency including:

(i) any reserves the Agency shall determine to be necessary for the payment of those items of costs and expenses referred to in this definition to the extent not already included in any other clause of this definition; and

(ii) additional amounts which must be.realized by the Agency in order to meet the requirement of any rate covenant with respect to coverage of principal and interest on Bonds contained in any Bond Ordinance or contract with holders of Bonds or which the Agency deems advisable in the marketing of its Bonds or under any contract to which it is a party.

Section 1. Term

(a) Initial Term and Termination

This Contract shall take effect on May 1, 2003 and shall remain in effect for an initial term through September 30, 2035 and thereafter from year to year until terminated by five (5) years prior written notice. In no event shall this Contract extend beyond September 30, 2040. Section 3, Rates and Charges, shall become effective on June 1, 2006 and shall continue in effect throughout the remainder of the term of this Contract. During the term of the Contract between the effective date of the Contract and June 1, 2006, Member shall continue to pay rates and charges according to the current Wholesale Power Supply Agreement between IMEA and the Member dated April 26, 2001.

(b) Conditions for Effectiveness of Contract

Notwithstanding any other provision herein, the Contract shall not become effective unless the Agency's Board of Directors has determined the mix of Members executing contract extensions or new Power Sales Contracts results in sufficient benefits to the Participating Members to justify proceeding with the issuance of bonds to fund the purchase of an ownership interest in a new base

load, coal-fired generating unit. The Agency shall provide the Participating Member with written notice within sixty days of any final decision by the Agency that the Contract is to become effective. . In addition, this Contract shall become null and void unless the Agency shall have issued bonds in connection with the purchase of an ownership interest in a new base load, coal-fired generating unit by a date not later than December 31, 2007. In the event this Contract does not become effective or becomes null and void, any Contracts between the Agency and the Members, which are otherwise superseded by this Power Sales Contract, shall not terminate but shall continue in full force and effect throughout its term.

(c) Commencement of Service and Cancellation of Existing Contract

Service to the Member under this Contract shall commence on May 1, 2003. Until the Agency commences the service under this Power Sales Contract, it shall continue to provide electric power and energy and the Member shall continue to take electric power and energy pursuant to the Wholesale Power Supply Agreement between the Agency and the Member dated April 26, 2001. Simultaneously with the commencement of service under this Contract, the present Wholesale Power Supply Agreement between the Member and the Agency shall be terminated and be superseded by this Contract, except that during the period from the effective date of this Contract and June 1, 2006, Member shall continue to be charged rates and charges according to the Wholesale Power Supply Agreement between IMEA and Member dated April 26, 2001.

All other power supply or transmission contracts between the Member and any entity other than the Agency shall be terminated or asssigned by the Member to the Agency no later than the date upon which the Agency commences service to the Member as provided in this subparagraph or such other action is taken as mutually agreeable by the Agency and the Member.

If the Member is taking power or transmission service from a supplier other than IMEA on such commencement date, the providing of power by IMEA shall commence only if that Member's obligations from such supplier have ceased pursuant to an assignment or termination of an existing contract.

Section 2. Sale Delivery and Purchase of Electricity

(a) Sale and Purchase

The Agency agrees to provide and sell and the Member agrees to take and pay for all of the electric power and energy required for the operation of the Member's electric utility during the term of this Contract and utilized in the operation of its municipal electric system.

(b) Restrictions on Other Sources

Except as provided in Section 2(c), the Member shall not obtain electric power and energy required for the operation of its electric utility system from any other source; provided, however, if the Member is required by law to purchase power and/or energy from a small power production facility, a cogeneration facility or other facility, the Member shall immediately inform the Agency of such requirement whereupon the Member and the Agency shall use their best efforts to arrange for such purchases to be made by the Agency. If such arrangements cannot be made, then the Member shall make the required purchase and sell the power and energy to the Agency at the same price and on the same terms and conditions under which it was purchased by the Member. The Member hereby appoints the Agency to act as its agent in all dealings with the owner or operator of any such facility from which power or energy is to be purchased by the Agency directly or indirectly and in connection with all other matters relating to any such purchase and agrees unless ordered to do so by a court of competent jurisdiction not to make any such purchase at prices or on terms and conditions not approved by the Board of Directors.

(c) Shortages

In the event that the Agency is not able to supply all of the power and energy requirements of its Participating Members because of an event of Force Majeure as defined in Section 2(d) or because of an outage of all or any part of Agency's Power Supply System or because of an event beyond Agency's control, and after such reasonable notice as the Agency may be able to give, the Agency shall allocate the power and energy available to it during any billing period among the Participating Members on a pro rata basis in accordance with the Participating Members' respective power and energy requirements supplied by the Agency during the corresponding billing period of the preceding calendar year. Where a Participating Member did not purchase power and energy from the Agency during the corresponding billing period of the preceding calendar year, that Participating Member's purchases during such billing period from its supplier replaced by the Agency shall be used.

Although the Agency agrees to use its best efforts to avoid a shortage in supply, during any period when the Agency is unable to supply all of the Participating Member's electric power and energy requirements, the Member shall be permitted to acquire from other sources the amount of electric power and energy which is not supplied by the Agency; provided, however, that at such time as the Agency is again able to supply all of the Member's electric power and energy requirements, the Member shall be required to take and pay for such electric power and energy in accordance with the provisions of this Contract. Before entering into any arrangement to acquire power and energy from any source other than the Agency for any period in excess of 48 hours, the Member will notify and consult with

Agency as to the terms and length of such purchases and obtain Agency's consent before contracting for such supply, which consent shall not be unreasonably withheld.

(d) Continuity of Service

The Agency shall employ its best efforts, in accordance with Prudent Utility Practice, to provide a constant, adequate and uninterrupted supply of power and energy to the Member (except where the Member is purchasing interruptible or curtailable power or non-firm energy from the Agency under a separate interruptible, curtailable or non-firm rate schedule adopted by the Board of Directors) and shall seek to restore service promptly and diligently on any interruption, but the Agency does not guarantee that service hereunder will be uninterrupted or at all times constant.

If the supply of electric power and energy to the Member hereunder shall fail, be interrupted, be reduced, or become defective through an event of Force Majeure, which shall include but not be limited to an act of God, nature, common enemy, failure of any power and energy or transmission service supplier of the Agency or any public authority, or because of accident, riot, insurrection, war, explosion, labor dispute, fire, flood or prudent actions taken to prevent or limit the extent or duration of disturbances of service on Agency's system, or if one or more of its suppliers, or that of systems through which electric service is rendered to the Agency or the Member is interrupted, or for any other cause beyond the reasonable control of the Agency, the Agency shall not be liable for damages caused thereby and such events shall not constitute a breach of the Agency's obligations under this Contract. No cause or contingency, however, including any failure of the Agency to supply electric power and energy to the Member for any period because of any of the aforesaid conditions, shall relieve the Member of its obligation to make all payments to the Agency required by this Contract, when due, for power and energy supplied by the Agency during any other period.

The Agency may interrupt service hereunder as necessary for repairs to, or changes of, equipment or facilities needed to provide service hereunder, or for installation of new equipment or facilities, but only for such reasonable times as may be unavoidable, and to the extent possible, with reasonable advance notice to, and in coordination with, the Member.

Section 3. Rates and Charges

As stated in Section 1 (a), this Section 3 shall become effective on June 1, 2006. During the period from the effective date of this Contract and June 1, 2006, Member shall continue to be charged rates and charges under the Wholesale Power Supply Agreement between IMEA and Member dated April 26, 2001.

The Member shall pay the Agency for all power and energy and other services furnished under this Contract from June 1, 2006 at the rates and on the terms and conditions set forth in the Rate Schedule, as the Rate Schedule may be changed and supplemented by the Agency's Board of Directors from time to time.

The Agency's Board of Directors shall establish and maintain its rates and charges under its Power Sales Contracts with its Participating Members to provide revenues which are sufficient, but only sufficient, together with other available revenues of the Agency, to cover the estimated Revenue Requirements of the Agency. In determining rates and charges necessary to produce sufficient revenues, the Agency shall take into account any anticipated (or actual) delinquency or default in payments by Participating Members. The Agency's rates and charges shall be set generally on a uniform postage stamp basis so as to recover all production and transmission costs in providing service to all Participating Members; provided, however, that the rates and charges may vary between Participating Members to reflect contracts with Participating Members having varying lengths of terms, the effect on rates for Participating Members selecting the option provided for in Section 1(d) of this Contract, differences in delivery voltage level, delivery facilities costs, different load factors, and variances in service provided to Participating Members which enter into Capacity Purchase Agreements and Participating Members which do not (including a phase-in of postage stamp rates to reflect load factors of certain Participating Members) and may contain rachets, load factor requirements and other provisions which affect all Participating Members or only Participating Members which obtain a portion of their requirements from any other source. Rates and charges may also vary between Participating Members executing Power Sales Contracts in 2003 and those who executed Power Sales Contracts in 1990 and who will have paid a full proportionate share of debt service for the Agency's 1990 bond financing that was refinanced in 1998. Participating Member shall pay a fixed Debt Service Payment associated with the Agency's 1990 bonds, which were refinanced in 1998. Prior to June 1, 2006, the Agency Board of Direcotrs shall establish a schedule of such payments based on the Agency's then current 30 year debt service demand charge set forth in Schedule B and Participating Member's monthly billing demands for the most recent twelve months. Such calculation shall establish the monthly fixed Debt Service Payment associated with such bonds which shall be paid each month by the Paticipating Member until such time as the debt service associated with the 1998 Power Supply System Revenue Refunding Bonds are fully paid and retired by the Agency. The methodology for establishing rates and charges used by the Agency may be modified by the Agency from time to time.

The Agency shall place into effect initial rates and charges applicable on commencement of service by the Agency to the Participating Members and thereafter at such intervals as it shall determine appropriate, but in any event not less frequently than once in each calendar year, the Agency shall review and, if necessary, revise its rates and charges under the Power Sales Contracts, to ensure that the rates and charges thereunder cover the Agency's estimated Revenue Requirements.

The Agency's rates and charges hereunder may include one or more automatic adjustment clauses which may be modified or changed periodically to insure that the Agency is protected against changing cost of fuel, purchased power, taxes, and other costs of service. The automatic

adjustment clauses may use estimated costs, with a later true-up to actual costs. The Agency may place an automatic adjustment clause in effect to recover costs from the date they were incurred upon thirty (30) days notice to the Member and shall provide the Member supporting information which need not be the same detailed analysis as for base rate changes.

In connection with any revision of the Rate Schedule, except as to automatic adjustment clause rate changes, the Agency shall cause a notice in writing to be given to all Participating Members which shall set out any proposed revision of the Rate Schedule with the effective date thereof, which shall be not less than sixty (60) days after the date of the mailing of the notice, and which shall be accompanied by an analysis of the estimated Revenue Requirements for which the Rate Schedule is proposed to be revised and the derivation of the proposed rate. The Member agrees to pay for electric power and energy made available by the Agency to it hereunder after the effective date of any revisions in the Rate Schedule in accordance with the Rate Schedule as so revised.

Section 4. Payment Obligation

(a) Nature of Obligation to Pay.

The obligation of the Member to pay all rates and charges established by the Agency under Section 3 of this Contract for the delivery of power and energy and for other services provided by the Agency shall not be subject to any reduction, whether by offset, counterclaim, recoupment or otherwise, and shall not be otherwise conditioned upon the performance by the Agency of its obligations under the Power Sales Contracts for Participating Members or any other instrument or agreement. It is expressly understood that the Member shall be obligated to pay all rates and charges imposed for power and energy supplied hereunder regardless of whether any one or more projects or other facilities of the Agency constructed, purchased or undertaken to provide service hereunder are operating or operable at any time; provided, however, that except as provided by this subsection (a) nothing herein shall be construed to prevent or restrict the Member from asserting any rights which it may have against the Agency under this Contract or under any provision of law, including the institution of legal proceedings for specific performance or recovery of damages.

(b) Limitation on Obligation to Pay.

All payments made by the Member for services hereunder shall be made as operating expenses from the revenues of the Member's electric utility system, or any integrated utility system of the Member of which, the Member's electric utility system may be a part, and from other funds of such system legally available therefor and shall be in addition to, and not in substitution for, any other payments, whether on account of dues or otherwise, owed by the Member to the Agency. The Member shall not be required to make payments under this Contract except from the revenues of the Member's electric system, or other integrated

public utility system of which the electric system is a part, and from other funds of such system legally available therefor. In no event shall the Agency, or any other person or entity, including any person or entity to which revenues under this Contract have been assigned or pledged, be entitled to look to, or seek to recover from, any other revenues, monies or property of the Member for payment of any amounts due hereunder. The obligation of the Member to make payments for services hereunder shall not constitute a general obligation of the Member and shall not constitute indebtedness of the Member for the purpose of any statutory limitation and the Member shall not be required to make such payments from any source other than the revenues and funds referred to in the first two sentences of this paragraph. In no event shall the Member be required to make payments under this Contract from tax revenues or to impose any new tax or adjust any existing tax for such purpose.

The Member's electric utility system shall be deemed to be a part of an integrated utility system for purposes of this Contract if the revenues of the electric utility system (i) are commingled with the revenues of one or more utility systems owned by the Member, or (ii) are utilized to pay operating expenses of the Member's electric utility system and one or more other utility systems owned by the Member, or (iii) are pledged to secure any bonds or other evidences of indebtedness issued to finance one or more utility systems owned by the Member. For purposes of this paragraph, the term "commingled" shall not be deemed to include the keeping of funds in one bank account so long as such funds are separately accounted for on the books and records of the Member. An integrated utility system shall not be deemed to exist hereunder merely (i) because the Member's electric utility and another utility of the Member are managed by the same commission or other public body, have common employees or facilities, the costs of which are shared, or undertake joint projects or (ii) where surplus funds from one utility which are legally available for transfer to the general fund of the Member are transferred or loaned to the other utility.

Section 5. Billing

(a) Billing Procedure

The calendar month shall be the standard period for all settlements under this Contract. The Agency may, from time to time, adopt another standard period for settlements. It is understood that, as soon as practicable after the end of each billing period, IMEA shall prepare and transmit a detailed statement to Member which shows amounts due from the Member.

Billing period statements for charges under this Contract shall be rendered by IMEA in the month following the billing period in which the charges were incurred. Each payment shall be due, and payment of each bill shall be made to IMEA by electronic transfer or such other means as shall cause payment to be

available for the use of IMEA on the first banking day following the tenth (10th) day after the date of invoice. Interest on unpaid amounts shall accrue daily at the then current published prime interest rate per annum of Bank One Illinois or its successor to the extent permitted by law from the due date of such unpaid amount and until the date paid.

(b) Billing Disputes

In the event that the Member takes exception to a bill rendered by the Agency, the Member shall pay the disputed amount and promptly inform the Agency in writing of the basis for the dispute. The Member will not be entitled to any adjustment on account of any disputed charges which are not brought to the attention of the Agency in the manner herein specified within thirty (30) days of when the Member first learns of the basis for the dispute.

Within thirty (30) days of receipt of the notice of the dispute, including an explanation by the Member of the nature of the dispute, the Agency shall respond to the Member's protest in writing. In the event it is determined that all or part of the disputed payment was not properly payable, then the Agency shall refund such amount together with interest thereon from the date the amount was paid until the refund is made at an annual rate equal to that established pursuant to subsection (a) above.

In addition, any billing adjustment sought by the Member which is related to the Agency obtaining a similar billing adjustment from any transmission or power or energy supplier to the Agency shall be dependent upon the Agency obtaining a corresponding adjustment from its supplier. The Agency shall pursue any such corresponding adjustment with due diligence, provided that the Agency considers such adjustment to be appropriate.

(c) Service Discontinuance and Contract Termination for Failure to Pay.

Whenever any amount due remains unpaid after the due date, the Agency may take all steps available to it under applicable law to collect such amount and, subject to any applicable regulatory requirements, after giving thirty (30) days advance notice in writing of its intention to do so, discontinue service hereunder if the amount remains unpaid at the end of said 30-day period. Whenever any amount due remains unpaid for one hundred twenty (120) or more days after the due date and after giving thirty (30) days advance notice in writing of its intention to do so, the Agency may terminate this Contract. No such discontinuance or termination shall relieve the Member from liability for payment for electric power and energy furnished hereunder, or made available to the Member where the Member has an obligation to take such power and energy and has not, or for damages suffered by the Agency, or any other Participating Neither, as a consequence of default by the Member. The Agency may, either at law or in

equity, by suit, action, mandamus, or other proceedings, enforce and compel the performance of the covenants, agreements, and obligations of the Member under this Contract to be performed by the Member or any officer thereof.

(d) Partial Month Bill

In the event that the initial or final month's service under this Contract is for less than a full month's service, the Member shall be billed for such partial month. The bill for such fractional part of a billing period shall be proportionately adjusted by IMEA in the ratio that the number of hours that electric service is furnished to the Member (in such fractional billing period) bears to the total number of hours in the billing period involved. Except as provided in this subsection with respect to fractional billing periods at the beginning and end of service, there shall be no proration of demand charges under the Rate Schedule for any billing period during any part of which power is made available to the Member.

Section 6. Delivery Conditions and Metering

(a) Electric Characteristics

The electric service furnished under this Contract shall be 60 Hertz, three phase alternating current and shall be delivered to the Delivery Points and metered by the Agency, or its designee, at such location or locations and such voltages as are shown on Schedule A. The Delivery Points, the Points of Measurement, the Delivery Voltage, and Special Conditions of Service shall be as set forth in Schedule A which may be amended by the Agency from time to time to include such other Delivery Points and Points of Measurements and other provisions as may be established by the Agency. In the event the Agency and the Member agree on the need for an additional Delivery Point, the Agency will use its efforts to obtain it, exercising Prudent Utility Practice in doing so. When electricity is measured at more than one (1) point of measurement, the maximum total coincident demand of the Member's system shall be determined by combining the recorded demand at each Point of Measurement during the same 60-minute interval. The Member shall maintain its system power factor in accordance with Schedule A.

The Member shall install, own and maintain or cause to be installed and maintained at Delivery Point(s) established pursuant to this Contract or elsewhere at a location mutually agreeable to the parties hereto such facilities as may be necessary to protect the system of the delivering entity, including such transformation, control, switching and protective equipment as meets Prudent Utility Practice.

The Member shall provide or cause to be provided and maintained suitable protective devices on its system to prevent any loss, injury or damage that might

result from single phasing conditions or any other fluctuation or irregularity in the supply of electrical power and energy. IMEA shall not be liable for any loss, injury or damage resulting from a single phasing condition or any other fluctuation or irregularity in the supply of energy which could have been prevented by use of such protective device.

(b) Responsibility for Facilities

The Agency's undertaking shall be complete upon the delivery of electric power and energy to the Delivery Points. Beyond the Delivery Points, except as the parties may agree otherwise, the Member shall furnish and maintain all devices, equipment and appliances, including but not limited to, control, protection, regulation and load shedding equipment, required to utilize safely and efficiently the power and energy delivered by the Agency.

If load growth or other power supply requirements or construction of facilities necessitate upgrading the Delivery Point(s) or adding new Delivery Point(s), unless otherwise agreed between the Agency and the Member, the Member shall be responsible for construction of, and the costs of, the new Delivery Point(s). The location of any new Delivery Point shall be subject to approval by the Agency, which approval shall not be unreasonably withheld. Upon request by the Member, the Agency may (but shall not be obligated to) fund the construction of new Delivery Points. In such event the cost thereof, with interest and supervisory costs, shall be recovered from the Member through the Agency's charges.

The Member shall provide, free of charge, suitable and sufficient space on its premises, including but not limited to all structures, enclosures and access facilities, for all electric facilities reasonably necessary for the Agency to deliver and measure power and energy to the Member hereunder and shall grant to the Agency, or the Agency's designee, a right-of-way over the Member's premises and property for the construction and maintenance of all such facilities as shall be placed thereon which are reasonably necessary for the provision of service to the Member.

The design and operating characteristics of the Member's electrical equipment at the Delivery Points shall be coordinated with the Agency and shall be subject to the Agency's approval, which approval shall not be unreasonably withheld.

(c) Metering

All electric power and energy delivered under this Contract shall be measured as to real and reactive demand and energy by suitable metering equipment, including any needed area interchange, totalizing or remote metering equipment, located, furnished, installed, maintained and tested by the Agency or its designated power or transmission supplier. All energy will be measured at the service voltage at the

Delivery Point by IMEA or the delivering party. In cases where IMEA or the delivering party elects to measure at a secondary voltage, IMEA or delivering party may at its option adjust the reading to a primary basis by the use of compensating meters.

It is understood that in some instances the metering equipment may not be located at the Delivery Points. All meters shall be kept under seal, such seals to be broken only when the meters are to be tested and maintained.

The Member shall provide at no cost to IMEA or delivering party suitable space, if necessary, for the installation of meters and metering equipment at the Delivery Points or Points of Measurement.

The Agency's meters shall measure and record the electrical power and energy furnished hereunder at such Point of Measurement. Such metering equipment shall provide a continuous record of the 60-minute integrated total demand to the Member at such Point of Measurement during each billing period throughout the term of the Contract. Such records shall be available at all reasonable times to authorized agents of the Member.

(d) Meter Testing

IMEA shall test and calibrate meters or cause meters to be tested and calibrated by comparison with accurate standards at intervals not to exceed the periodic test schedule approved by the Illinois Commerce Commission for such meters. IMEA shall make or cause to be made special meter tests at any time at the Member's request. The cost of all tests shall be borne by IMEA, except that if any special meter test made at the Member's request shall disclose that the meters are recording accurately, the Member shall reimburse IMEA for the cost of such tests. Meters registering not more than 2% above or below normal shall be deemed to be accurate. The readings for any meter which shall have been disclosed by test to be inaccurate shall be corrected in accordance with the percentage of inaccuracy found by such test for the period, not exceeding ninety (90) days, that such inaccuracy is estimated to have existed. Should any meter fail to register, the electric power and energy delivered during such period of failure shall for billing purposes be estimated by IMEA and the Member from the best information available. IMEA shall notify the Member or cause the Member to be notified in advance of the time of any meter test so that the Member's representative may be present at such meter test.

Testing procedures may be changed by the Agency from time to time to reflect current electric industry practice and such change shall be incorporated by the Agency within Schedule B. The Member shall be entitled to install its own backup parallel metering.

Section 7. Additional Covenants of the Agency.

The Agency covenants and agrees as follows:

(a) Performance

The Agency shall perform all of its obligations under this Contract promptly with due diligence in accordance with Prudent Utility Practice. The Agency shall employ its best efforts to provide adequate, reliable and reasonable cost electric service to the Member under this Contract. To this end the Agency shall plan to have such power and energy and such transmission resources available by contract or otherwise as are necessary and desirable to meet the requirements of all Participating Members, including reasonably anticipated growth as projected by the Agency.

The Agency will perform or cause to be performed services, including but not limited to, (i) coordinating and monitoring the investigating, studying, planning, engineering, designing, financing, installing, constructing, acquiring, operating, maintaining, retiring, decommissioning or disposing of any part of its Power Supply System; (ii) issuing and selling Bonds; (iii) planning, undertaking, coordinating and monitoring the economic dispatching and scheduling of power and energy to the Participating Members but only to the extent that the Agency possesses at the time its own load control capability; and (iv) providing such other services as the Agency from time to time shall determine to be appropriate or necessary to provide to the Member and enable the Member to utilize an adequate, reliable and economic supply of power and energy.

The duration and term of all contracts entered into by the Agency for the acquisition of facilities or for the acquisition of power and energy shall be determined by the Agency in light of its analysis of the power markets and determination of an appropriate mix of short, intermediate and long term resources.

(b) Enforcement of Obligations

The Agency shall promptly collect all amounts due and enforce all provisions of the Power Sales Contracts and shall at all times maintain and promptly and vigorously enforce its rights against any Member which does not pay sums when due or perform the contract obligations pursuant to the provisions of Section 5 of this Contract.

(c) Records and Accounts

The Agency shall keep accurate records and accounts of its operations in connection with this Contract in accordance with generally accepted accounting

practices. The Agency's books and records shall be audited independently once a year. The Member shall have the right at any reasonable time to examine and audit such records at the Member's expense.

(d) Prudent Utility Practice

The Agency shall, in accordance with Prudent Utility Practice: (1) at all times operate and conduct its business in connection with this Contract in an efficient manner, (ii) maintain the Power Supply System in good repair, working order and condition, and (iii) from time to time make all necessary and proper repairs, renewals, replacements, additions, betterments and improvements with respect to the Power Supply System so that at all times the business carried on in connection therewith shall be properly conducted.

(e) Other Services

The Agency may (but shall not be obligated to) provide such other services to the Member as the Member may request, including but not limited to, maintenance of the Member's system, billing of the Member's customers, safety training, load management, and meter reading. For any such service so provided by the Agency, the Agency will adopt charges therefor includable within its Rate Schedule, which charges shall be paid only by those Members requesting such service.

(f) Marketing Power.

After satisfying, to the extent provided for herein, the total requirements of all Participating Members, IMEA shall use its best-efforts to market and dispose of under the most economically advantageous terms and conditions obtainable, all its surplus electric power and energy which in the sole judgment of IMEA can be disposed of without adversely affecting performance by IMEA under this Contract.

(g) Sales to Non-Participating Members

The Agency may provide power and energy to Members which are not Participating Members at rates and under terms and conditions to be prescribed by the Board of Directors.

Section 8. Additional Covenants of the Member.

The Member covenants and agrees as follows:

(a) Maintenance of Rates

The Member shall maintain rates for electric power and energy to its customers so that such rates shall provide revenues which, together with other funds estimated to be available, will be sufficient to meet the Member's obligations to the Agency under this Contract, and all other operating expenses of the Member's electric system, and to pay all obligations of the Member payable from, or constituting a charge or lien on, the revenues of its electric system.

If the Member establishes or maintains an integrated utility system of which the electric system is a part for its electric, water, sanitary sewer, wastewater or similar utility systems (or any combination of two or more thereof which includes its electric system), it shall maintain its rates for the services provided to the customers of its integrated utility system so that such rates shall provide revenues, which, together with other funds estimated to be available, will be sufficient to meet the Member's obligations to the Agency under this Contract, and all other operating expenses of the Member's integrated utility system, and to pay all obligations payable from, or constituting a charge or lien on, the revenues of its integrated utility system.

(b) No Sale or Lease

The Member shall not sell, lease or otherwise dispose of all or substantially all of its electric system except on one hundred twenty (120) days' prior written notice to the Agency and, in any event, shall not so sell, lease or otherwise dispose of the same unless all of the following conditions are met: (i) at the sole option of the Agency either (x) the Member shall assign this Contract and its rights and interests hereunder to the purchaser, assignee or lessee of the electric system and such purchaser, assignee or lessee shall assume all obligations of the Member under this Contract in such a manner as shall assure the Agency to its sole satisfaction that the amount of electric power and energy to be purchased hereunder and the amounts to be paid therefor will not be reduced, and if and to the extent deemed necessary by the Agency in its sole discretion to reflect such assignment and assumption, the Agency and such purchaser, assignee or lessee shall enter into an agreement supplemental to this Contract to clarify the terms on which power and energy are to be sold hereunder by the Agency to such purchaser, assignee or lessee; or (y) such purchaser, assignee or lessee shall enter into a new contract with the Agency for the purchase of electric power and energy in amounts, at prices and on terms which the Agency in its sole discretion determines not to be less beneficial to it and the other Participating Members than this Contract is and, upon such sale, lease or other disposition and the entering into of such new contract, this Contract shall be terminated; (ii) the senior debt, if any, of such purchaser, assignee or lessee, if such purchaser, assignee or lessee is not a Participating Member, shall be rated in one of the three highest whole rating categories by at least one nationally-recognized bond rating agency; and (iii) the

Agency shall by resolution determine that such sale, lease or other disposition will not adversely affect the other Participating Members of the Agency or the value of this Contract, or any new contract entered into pursuant to clause (i) (y) above, as security for the payment of Bonds and interest thereon or adversely affect the eligibility of interest on Bonds (then outstanding or thereafter to be issued) for federal tax-exempt status. The Agency shall make the determinations required by this subsection (b) within one hundred twenty (120) days of receipt by the Agency of the notice referred to in the first sentence of this subsection (b) and shall set forth those determinations in writing to the Member.

In the event any sale, lease or other disposition is permitted pursuant to this subsection (b), Agency may request as additional security to preserve the flow of revenues under this Contract, and Member shall provide the funds to establish an escrow deposit equivalent to the Member's pro rata contribution to the Agency's Revenue Requirements for the balance of the Contract's initial term. Every five years, after the establishment of such escrow deposit, Agency will release to the Member such of the funds in the escrow equivalent to those paid to the Agency by the Member's purchaser, assigns or lessee during such previous five years.

(c) Prudent Utility Practice

The Member shall, in accordance with Prudent Utility Practice, (1) at all times operate its electric system, or integrated utility system of which the electric system is a part, and the business in connection therewith in an efficient manner, (2) maintain its electric system, or integrated utility system of which the electric system is a part, in good repair, working order and condition, and (3) from time to time make all necessary and proper repairs, renewals, replacements, additions, betterments and improvements with respect to the electric system, or integrated utility system of which the electric system is a part, so that at all times the business carried on in connection therewith shall be properly conducted.

(d) Operating Expenses.

The Member represents, warrants and covenants that all payments to the Agency pursuant to this Contract shall constitute operating expenses of the Member's electric system (and should so provide in any future ordinance authorizing borrowing by the Member) payable from any operating and maintenance fund established for such system, or for such integrated utility system of which the electric system is a part, and that such operating expenses are and shall remain payable from the revenues of the Member's electric system, or integrated utility system, prior (except to the extent that any provision in any existing bond ordinance or borrowing resolution of the Member governing outstanding obligations of the Member provides to the contrary) to payment of any debt service payable from such revenues.

(e) Tax Status

(i) The Member shall not use or permit to be used any of the electric power and energy acquired under this Contract or operate its system in any manner or for any purpose or take any other action or omit to take any action which could, either alone or in conjunction with any other similar actions by the Member or other Participating Members of the Agency, result in.loss of the exclusion from gross income for federal income tax purposes of the interest on any Bond or Bonds issued by the Agency, or which could be issued by the Agency in the future, as that status is governed by the federal income tax laws, as amended from time to time, including but not limited to, Section 141 of the Internal Revenue Code of 1986, as amended, and the Treasury Regulations or any rulings promulgated thereunder or as affected by a decision of any court of competent jurisdiction (collectively, the "Tax Laws").

(ii) At the time of execution of this Contract, the Member has no contracts whereby any person, corporation, partnership or other non-governmental entity agrees to purchase from the Member electric power and/or energy provided to the Member under this Contract for a period of more than thirty (30) days except as shown on Schedule D hereto, and the Member has no current expectation of entering into any such contracts, except as set forth in Schedule D hereto. At least sixty (60) days prior to entering into any contract whereby any person, corporation, partnership or other non- governmental entity agrees to purchase from the Member electric power and/or energy provided to the Member under this Contract for a period of more than thirty (30) days, the Member shall notify the Agency of its intent to enter into such contract and provide copies of such contract to the Agency. Within sixty (60) days after receipt of such notice, the Agency shall advise the Member as to whether, in the opinion of counsel of recognized standing in the field of law relating to municipal bonds selected by the Agency, the entering into of such contract would result in a violation of the covenant in clause (i) above. The cost of this opinion shall be borne by the Member. Any determination by the Agency that any such contract would violate the-covenant set forth in clause (i) above shall be made by the Agency based upon the aforementioned opinion. In the event that allocations are necessary under the Tax Laws to determine whether entering into any such contract violates the covenant set forth in clause (i) above, the Agency shall make such allocations, in its sole discretion, after receipt of an opinion of counsel of recognized standing in the field of law relating to municipal bonds selected by the Agency and paid for by the Member.

(f) Sale of Power.

The Member shall not sell at wholesale any of the electric power and energy delivered to it hereunder by the Agency to any customer of the Member or any other entity for resale by that customer or entity, unless it has first given the Agency 60 days written notice of its intent to sell such power and energy. The Agency, after receipt of such notice, shall have 30 days in which to impose limits on the amount of power and energy to be sold or to veto such sale if the sale will jeopardize the Agency's availability of resources to serve its Participating Members or increase the cost of power and energy to the Agency.

(g) Member Rate Design. Nothing in this Contract shall be construed to diminish or surrender the power of the Member to regulate the rate design for public services rendered by the Member to its ratepayers.

Section 9. Cooperation.

If it becomes necessary by reason of any emergency or extraordinary condition for either the Agency or the Member to request the other Party to furnish personnel, materials, tools, or equipment for the accomplishment of its obligations hereunder, the other Party shall cooperate with the requesting Party and render such assistance as the other Party may determine to be available. The Party making such request, upon receipt of itemized bills from the other Party, shall promptly reimburse the other Party for all costs reasonably associated with providing assistance, including but not limited to costs of labor, supplies, facilities and equipment and may include an amount not to exceed ten percent (10%) of the total for administrative and general expenses; such costs are to be determined on the basis of current charges or rates used in its own operations by the Party rendering the assistance.

Section 10. Assignment of Contract.

(a) This Contract shall inure to the benefit of and shall be binding upon the respective successors and assigns of the Parties to this Contract provided, however, that, except for any assignment by the Agency authorized by subsection (b) of this section, and except for any assignment by the Member in connection with the sale, lease or other disposition of all or substantially all of its electric system as provided for in Section 8(b) above, neither this Contract nor any interest herein shall be transferred or assigned by either Party, except with the consent in writing of the other Party, which consent shall not be unreasonably withheld, it being understood that it would be reasonable for the Agency to withhold such consent if such transfer or assignment would (i) reduce the total amount of electric power or energy being sold hereunder; (ii) be to a party (other than a Participating Member of the Agency) with senior debt, if any, not rated in one of three highest whole rating categories by at least one nationally recognized bond rating agency; or (iii) adversely affect the value of this Contract or any new contract entered into pursuant to clause (i) (y) of Section 8(b) hereof as security for the payment of

Bonds and interest thereon or affect the eligibility of interest on Bonds (whether then outstanding or thereafter to be issued) for federal tax-exempt status. No assignment or transfer of this Contract shall relieve the Parties of any obligation hereunder, unless specifically agreed to in writing by the other Party. It is understood and agreed that if this Contract is assigned or pledged by the Agency pursuant to subsection (b) of this section 10, no proposed assignment of this Contract by the Member shall be consented to by the Agency except in accordance with the terms of such assignment and pledge by the Agency and any applicable Bond Ordinance or other governing instrument of the Agency, in addition to the foregoing.

(b) It is understood and agreed that the Agency is likely to issue Bonds in connection with meeting its obligations under this Contract. The Member acknowledges and agrees that the Agency may assign and pledge to any trustee or similar fiduciary designated in any Bond Ordinance all of, or any interest in, the Agency's right, title and interest in, to and under this Contract and all payments to be made to the Agency under the provisions of this Contract as security for the payment of the principal (including sinking fund installments) of, premium, if any, and interest on any Bonds and all other payments as required by the Bond Ordinance and may deliver possession of this Contract to such trustee in connection therewith, arid, upon such assignment, pledge and delivery, the Agency may grant to such trustee any rights and remedies herein provided to the Agency and thereupon any reference herein to the Agency shall be deemed, with the necessary changes in detail, to include such trustee. The Member agrees to take all steps necessary to facilitate any such assignment and pledge.

Section 11. Insurance.

The Parties to this Contract shall each procure and maintain such policies of general liability insurance and other insurance or self insurance as shall be necessary in accordance with Prudent Utility Practice to insure themselves against any claim or claims for damages arising by reason of property damage, personal injury or death occasioned directly or indirectly in connection with the operation of its electric system, or integrated utility system of which the electric system is a part, or the performance of activities undertaken by it in connection with this Contract.

The Agency and the Member shall maintain insurance, if available, or self insurance on their electric facilities to cover damage or accident to those facilities in an amount consistent with Prudent Utility Practice.

Each Party agrees to defend, indemnify and hold harmless the other Party against any and all claims, liability, loss, damages or expense, including attorneys' fees, caused by or resulting solely from the operation of the indemnifying Party's electric facilities, or integrated utility system facilities, or solely from the negligent acts or omissions of the indemnifying Party, its employees or agents. This provision is not intended to be, and shall not be construed to

constitute, a waiver for any purpose as to any person or entity of any statutory claims procedure or statutory limitation on liability applicable to either Party.

Section 12. Opinions as to Validity.

Upon the execution and delivery of this Contract, the Member shall furnish the Agency with an opinion by an attorney or firm of attorneys and a certificate from the Member to the effect that (i) the Member is a political subdivision and municipal corporation of the State of Illinois and is fully authorized and empowered under the laws of the State of Illinois to enter into this Contract and to perform its obligations hereunder, (ii) based upon the attorney's knowledge and due investigation, no consent, order, waiver or any other action by any person, board or body, public or private, is required as of the date of execution of this Contract by the Member for the Member to enter into this Contract and to perform its obligations hereunder, (iii) based upon the attorney's knowledge and due investigation, there is no action, suit or proceeding at law or in equity or by or before any court, administrative agency, governmental instrumentality or other agency pending or threatened against or affecting the Member or its electric utility system (or, if the Member's electric utility system shall be deemed to be a part of an integrated utility system, such integrated utility system) which seeks to prohibit, restrain or enjoin the Member from entering into or complying with its obligations contained in this Contract, including payment of obligations to the Agency, or in any way affects or questions the validity or enforceability of this Contract, or in any way might materially adversely affect the Member's ability to carry out the transactions contemplated by this Contract, (iv) this Contract has been duly and validly authorized, executed and delivered by the Member and constitutes a legal, valid and binding obligation of the Member enforceable against it in accordance with its terms, except as such enforceability may be limited by applicable bankruptcy, insolvency, reorganization and similar laws of general application relating to the rights and remedies of creditors, and (v) the execution and delivery of this Contract and compliance by the Member with its terms will not conflict with, or constitute on the part of the Member a breach of or a default under, any existing statute, law, governmental rule, regulation, decree, resolution, ordinance, charter or order, or any agreement, indenture, mortgage, lease or instrument to which the Member is subject or by which it is or its properties are or may be bound.

The Member shall at its sole expense furnish the Agency, in form and substance satisfactory to and at such time requested by the Agency, such additional legal opinions, certificates, instruments and other documents as the Agency may reasonably request.

Section 13. Dispute Resolution/Procedure.

Should any dispute arise under this Contract concerning the interpretation or application of the Contract or should any controversy, claim or counterclaim arise before the initiation of litigation, such dispute shall then be submitted to the chief executive officers of the Parties for resolution. Each Party shall designate its chief executive officer. In the event no agreement is reached, the parties shall have all remedies provided by law.

Section 14. General Provisions.

(a) Regulation.

This Contract, and the respective obligations of the parties hereunder, are subject to all valid laws, orders, rules, and regulations of duly constituted authorities having jurisdiction.

(b) Access and Information.

Duly authorized representatives of the Agency and the Member shall be permitted to enter the other's premises at all reasonable times in order to carry out the provisions of this Contract.

The Agency and the Member will promptly furnish each other such information as may be reasonably requested from time to time in order to carry out more effectively the intent and purpose of this Contract, or as may be reasonably necessary and convenient in the conduct of the operations of the party requesting such information. Without limiting the generality of the foregoing, the Member shall, upon request, furnish to the Agency all such information, certificates, engineering reports, feasibility reports, information relating to load forecasting and power supply planning, financial statements, opinions of counsel (including the opinion required by Section 12 hereof), official statements and other documents as shall be reasonably necessary in connection with financing of the Agency.

Each Party may audit the books and records of the other Party upon reasonable request, and the cost shall be paid by the requesting Party.

The Member shall assist the Agency in forecasting the Member's power and energy requirements to be provided under this Contract. To this end the Member shall promptly provide the Agency with notice of all anticipated changes in the Member's electric load and shall provide the Agency with the Member's projected future power and energy requirements in such form or for such periods as the Agency may from time to time request. The Member also shall provide the Agency with all other information reasonably sought by the Agency for the purpose of load forecasting and planning.

The Member further agrees to provide such certificates and opinions as may be required by the Agency for any financing.

(c) Compliance with Terms of Service.

The Member agrees to comply with all terms and conditions of service applicable to sales of power and energy and/or transmission service to the Agency by any

supplier for the Member's load. The Agency shall provide the Member with a copy of all such terms and conditions of service.

(d) Demand-Side Programs.

The Member agrees to cooperate with and endeavor to implement at the Member's cost any demand-side, conservation, load management and similar programs of the Agency adopted in connection with the provision of service hereunder.

(e) Relationship to and Compliance with Other Instruments.

It is recognized by the parties hereto that, in undertaking, or causing to be undertaken, the planning, financing, construction, acquisition, operation and maintenance of the Power Supply System, the Agency must comply with the requirements of any Bond ordinance, any agreements for the purchase or transmission of power and energy, any agreement with any owner or co-owner of or participant or co-participant in any facility included in the Power Supply System relating to the construction, operation or maintenance thereof and all licenses, permits and regulatory approvals necessary for such planning, financing, construction, acquisition, operation and maintenance, and it is therefore agreed that the Agency's performance under this contract must be consistent with the terms and provisions of any Bond Ordinance, any such agreements for the purchase or transmission of power and energy (including any provisions for the curtailment or interruption of power and energy or transmission service contained therein), any such agreement with any owner or co-owner of or participant or co-participant in any facility included in the Power Supply System and all such licenses, permits, and regulatory approvals.

(f) No Relationship Created

None of the provisions of this Contract is intended to create, nor shall it be deemed to create, any relationship between the Parties other than that of independent entities contracting with each other solely for the purpose of effectuating the provisions of this Contract. Neither Party, nor any of their respective officers, agents or employees, shall be construed to be an officer, agent or employee of the other, solely by reason of the existence of this Contract. Neither Party shall make any contract or representation, or incur any liability or obligation whatsoever, on behalf of or in the name of the other Party.

(g) Amendment.

Except as provided for expressly herein, neither this Contract nor any terms hereof may be terminated, amended, supplemented, waived or modified except by an instrument in writing executed by each party to this Contract.

(h) Governing Law.

This Contract shall be governed by, and construed in accordance with, the laws of the State of Illinois.

(i) Delays and Waivers.

The failure of either Party to insist in any one or more instances upon the performance of any of the terms, covenants or conditions of this Contract shall not be construed as a waiver or relinquishment of the future performance of any other term, covenant or condition, but the defaulting Party's obligation with respect to future performance of any other term shall continue in full force and effect. The failure of either Party to take any action permitted to be taken by it by this Contract shall not be construed as a waiver or relinquishment of that Party's right thereafter to take such action.

(j) Headings; References.

The headings used in this Contract are for convenience only and shall not constitute a part of this Contract. Unless the context clearly requires otherwise, all references to "Sections" and other subdivisions are to the sections and subdivisions of this Contract.

(k) Severability.

In the event that any of the terms, covenants or conditions of this Contract, or the application of any such term, covenant or condition, shall be held invalid as to any person or circumstance by any court having jurisdiction under the circumstances, the remainder of this Contract and the application of its terms, covenants or conditions to such persons or circumstances shall not be affected thereby. If any provision of this Contract is held invalid, the Parties agree to negotiate a revision to this Contract which to the extent possible restores the original intent of this Contract with respect to the invalid provision.

In the event that any of the terms, covenants or conditions of any Power Supply Contract for Participating Members (other than this Contract), or the application of any such term, covenant or condition, shall be held invalid as to any person or circumstance by any court having jurisdiction under the circumstances, it is agreed by the Parties hereto that such invalidity shall have no effect whatsoever upon any of the terms, covenants or conditions of this Contract.

(l) Notices.

Any notice required or permitted under this Contract shall be in writing and shall be given by personal delivery or certified mail, return receipt requested, addressed as follows:

To the Agency: Illinois Municipal Electric Agency
Attention: General Manager & CEO
919 S. Spring Street
Springfield, Illinois 62704

To the Member: _____

_____

_____

Either Party may, by written notice, designate a different or additional address for notices to it. All notices hereunder shall be effective only upon receipt by the Party to which notice is being given.

(m) Survivorship of Obligations.

The termination of this Contract shall not discharge either Party hereto from any obligation it owes to the other Party under this Contract by reason of any transaction, loss, cost, damage, expense, or liability which shall occur or arise (or the circumstances, events, or basis of which shall occur or arise) prior to such termination. It is the intent of the parties hereby that any such obligation owed (whether the same shall be known or unknown at the termination of this Contract or whether the circumstances, events, or basis of the same shall be known or unknown at the termination of this Contract) shall survive the termination of this Contract.

Section 15. No Adverse Distinction

IMEA agrees that there shall be no adverse distinction and no pattern of undue discrimination in carrying out its obligations under this Contract relating to the Member as compared to other Participating Members; provided, however, that differences in treatment between Participating Members based on variances in cost of service determined by IMEA and other criteria as provided for in Section 3 shall not be considered an adverse distinction or undue discrimination for purposes of this Contract. Member's sole remedy for adverse distinction is pursuant to this Contract.

Section 16. Intergovernmental Freeze.

This Contract and the obligations hereunder shall not be subject to the Local Government Financial Planning and Supervision Act of the State of Illinois, or, to the extent permitted, to any other stay, moratorium, freeze or bankruptcy law.

IN WITNESS WHEREOF, the Parties have caused this Contract to be executed by their proper officials, respectively, being thereunto duly authorized, and their respective corporate seals to be hereto affixed, as of the day, month and year first above written.

ILLINOIS MUNICIPAL ELECTRIC AGENCY

By: _____
General Manager & CEO

ATTEST:

_____
Administrative Assistant

VILLAGE OF CHATHAM, ILLINOIS

By: _____
President

ATTEST:

_____
Village Clerk

VILLAGE OF CHATHAM
CORPORATE
SEAL
ILLINOIS

SCHEDULE A

ILLINOIS MUNICIPAL ELECTRIC AGENCY
SERVICE SPECIFICATIONS

MEMBER: Village of Chatham, Illinois

1. Applicability. These service specifications are applicable to the Power Sales Contract dated as of March 11, 2003 covering the supply and delivery of electric power and energy by the Agency to the Village of Chatham, Illinois, hereinafter referred to as the "Participating Member".

2. Points of Delivery. The Agency is obligated to deliver electric power and energy contracted for by the Participating Member at the following points and voltages, which are shown in the diagram under paragraph 5 hereof:

Delivery Point	Delivery Voltage
Chatham 138 kV Substation 112 S. Main St.	138 kV

3. Points of Measurement. The Agency shall meter electric power and energy delivered to the Participating Member as follows and as shown in the diagram under paragraph 5 hereof:

Metering Point	Metering Voltage
Chatham 138 kV Substation 112 S. Main St.	138 kV

4. Adjustments. Where electric power and energy are metered on the low side of a transformer at any Point of Delivery, meter readings for all electric power and energy supplied by the Agency at such metering point will be increased to compensate for transformer losses between the delivery voltage and the metering voltage.

   If there are other losses between any Point of Measurement and any Point of Delivery, an appropriate loss factor will be used to compensate for losses.

5. Diagrams. Following is a one-line diagram of the facilities at each Point of Delivery and Point of Measurement.

Effective: MAY 1, 2003

Approved: [signature] Issued by: [signature]

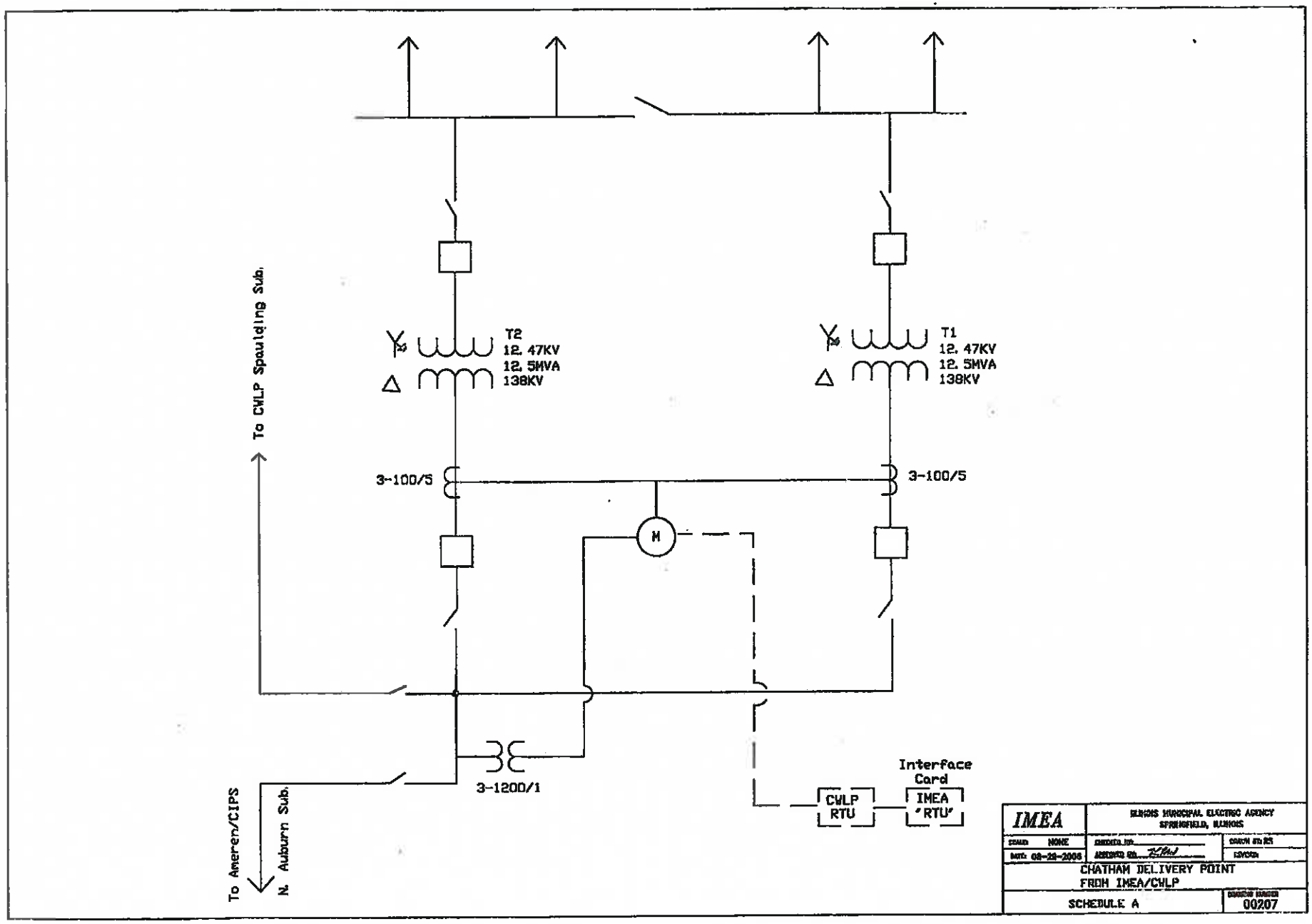
To CWLP Spaulding Sub.
T2
12.47KV
12.5MVA
138KV
T1
12.47KV
12.5MVA
138KV
3-100/5
3-100/5
M
3-1200/1
Interface Card
CWLP RTU
IMEA 'RTU'
To Ameren/CIPS
N. Auburn Sub.
IMEA
ILLINOIS MUNICIPAL ELECTRIC AGENCY
SPRINGFIELD, ILLINOIS
SCALE NONE
DATE 08-29-2006
CHATHAM DELIVERY POINT
FROM IMEA/CWLP
SCHEDULE A
00207

SCHEDULE B

ILLINOIS MUNICIPAL ELECTRIC AGENCY
POWER SALES RATE SCHEDULE

1. Applicability. This Power Sales Rate Schedule is applicable to electric service for all requirements for municipal use and redistribution to retail customers purchased in accordance with the provisions of the Power Sales Contract, other than those requirements purchased under Schedules B-2, B-3, B-4, B-5 and B-6.

2. Availability. This Power Sales Rate Schedule is available to Participating Members of the Agency who have executed the Power Sales Contract.

3. Character of Service. Electricity furnished under this Schedule B at one or more Points of Delivery as set forth in Schedule A shall be sixty-Hertz, three phase, alternating current.

4. Billing Rates. (a) For electricity furnished under Schedule B, the charges for each Billing Period shall be determined as follows:

Non-Debt Demand Charge:	
Power Supply Charge	$6.90 per kilowatt ("kW") of Billing Demand
Delivery Service Charge	$2.60 per kilowatt ("kW") of Billing Demand for Members with delivery voltage less than 100 kV -OR- $2.10 per kilowatt ("kW") of Billing Demand for Members with delivery voltage of 100 kV or greater
Energy Charge	20.00 mills per kilowatt-hour ("kWh") for all Billing Energy
Reactive Demand Charge	$0.25 per kilo-VAr ("kVAr") for each kVAr of Maximum Lagging Reactive Billing Demand

(b) Debt Service Demand Charge - 30 Year Members. In addition to the charges shown in Item 4.(a) above, all Participating Members who have elected to pay rates based on a thirty year amortization of the Agency's debt shall pay the following demand charge for each Billing Period:

Debt Service Demand Charge	$3.00 per kilowatt ("kW") of Billing Demand

(c) Debt Service Payment - Other Members. In addition to the charges shown in Item 4.(a) above, all Participating Members who have elected to pay rates based on an amortization period for the Agency's debt obligations other than thirty years shall pay monthly debt service payments based on the schedule provided by the Agency prior to the effective date of the Power Sales Contract dated June 1, 1990.

(d) Backup Facilities Charge – Any Member who has access to an alternative feed for which IMEA incurs separate additional charges from a Delivery Service Provider will reimburse IMEA the actual cost of such additional facilities.

5. Billing Metering. The metered demand in kW each Billing Period shall be the highest 60 minute integrated demand (or corrected to a 60 minute basis if demand registers other than 60 minute demand registers are installed) measured during the Billing Period.

Demand and energy meter readings shall be adjusted, if appropriate, as provided in Schedule A of the Contract.

6. Billing Demand. The Billing Demand in any Billing Period shall be the metered demand for the period as determined under paragraphs 4 and 5 giving effect to all applicable adjustments, including those for Schedules B-2, B-3, B-4, B-5 and B-6.

7. Billing Energy. The Billing Energy in any Billing Period shall be the metered energy for the period as determined under paragraphs 4 and 5 giving effect to all applicable adjustments as required, including those for Schedules B-2, B-3, B-4, B-5 and B-6.

8. Maximum Lagging Reactive Billing Demand. The Maximum Lagging Reactive Billing Demand for any billing period shall be the highest hourly summation of the flow of reactive power from IMEA to each Participating Member during the Billing Period.

9. Cost Adjustments. The Agency shall apply adjustment factors as either charges or credits on the Participating Member bills as determined from the variance in the Agency's demand and energy supply costs from those as calculated at the time of the Agency's base rate determination. Adjustments for variances in demand related costs shall be accounted for using Demand Cost Adjustment Factors ("DCA"). Adjustments for variances in energy related costs shall be accounted for using Energy Cost Adjustment Factors ("ECA"). Adjustments for variances in debt service costs shall be accounted for using Debt Service Adjustment Factors ("DSA").

Demand Related Costs. Demand related cost variance shall be computed monthly as the difference between the Agency's actual and base demand related costs. The resulting DCA factor for the period shall be calculated to the nearest $0.01 per kilowatt, using the following formula:

$$DCA = \frac{SRDC - 6.90\ MBD}{MBD}$$

Where:

SRDC is the total fixed costs of the Agency's System Resources used to serve the Agency's Participating Members during the billing period, which includes, but is not limited to, the following:

(1) Capacity payments to generating Participating Members.

(2) The demand related costs of all long term power purchased by the Agency.

(3) The monthly fixed operations and maintenance expense associated with the production and transmission of electricity from the Agency's own resources.

(4) A credit for the revenue collected by the Agency related to the Schedule B-1 demand charges.

(5) A credit for the revenue collected by the Agency related to the Reactive Demand Charge.

(6) Other monthly fixed costs, credits or Agency obligations which are considered related to the supply of capacity to the Participating Members, and are considered appropriate to charge as a demand related cost by the Board of Directors.

MBD is the total kilowatt billing demand for the period of the Agency's Participating Members excluding the kilowatt billing demand billed under Schedules B-3 and B-5.

Energy Related Costs. Energy related cost variance shall be computed monthly as the difference between the Agency's actual and base energy related costs. The resulting ECA factor for the period shall be calculated, to the nearest $0.00001 per kilowatt-hour, using the following formula:

$$ECA = \frac{SREC}{MBE} - 0.02000$$

Where:

SREC is the total energy related cost of the Agency's System Resources for the Agency's Participating Members' usage during the period, which includes, but is not limited to, the following:

(1) Fuel and generation payments to generating Participating Members.

(2) The energy related costs of losses associated with transmission and distribution service charges.

(3) The costs of all long and short-term energy and all short term power purchased by the Agency.

(4) The monthly fuel and variable operations and maintenance expenses associated with the production of electricity from the Agency's own resources.

(5) 1.25 Mills/kWh – For the purpose of increasing the Agency's General Reserve Fund.

(6) Other monthly operating costs, credits or Agency obligations which are considered related to the supply of energy to the Participating Members, and are considered appropriate to charge as an energy-related cost by the Board of Directors.

MBE is the total kilowatt-hour billing energy for each billing period of the Agency's Participating Members.

Debt Service Costs: Debt Service cost variances shall be computed monthly. Credits or debits due to the DSA may be accumulated for several months during a fiscal year and then apportioned on a pro-rata basis to all Members paying 30 year debt service. Credits so accumulated shall be refunded to such Members during the fiscal year at the discretion of the General Manager so the net amount in the DSA fund at the end of the fiscal year is zero.

$$DSA = 3.00\ ABD + DSB - DSR$$

Where:

ABD is the adjusted billing demand of Participating Members paying 30 year debt service.
DSB is the debt service collected under the B-2 rate.
DSR is the actual debt service requirements for the billing period.

10. Adjustment for Service to Non-Participating Members. Adjustments to the Energy Cost Adjustment Factor may be made monthly to reflect the costs of service and revenues derived from sales by the Agency to non-participating member systems. The revenues from such sales shall be examined monthly on a case-by-case basis and any profits shall be credited to the rate stabilization account unless directed otherwise by the Board of Directors.

11. Tax Adjustment. In the event of the imposition of any tax, or payment in lieu thereof, by any lawful authority on the Agency for the purchase, production, transmission, or sale of electricity, the charges hereunder may be increased to pass on the Member its share of such tax or payment in lieu thereof.

12. Billing Period. The Billing Period shall be as nearly as practical to a calendar month.

Effective: November 1, 2000

Approved: Robert O'Donnell
President

Issued by: Ronald D Earl
General Manager & CEO

APPROVED 12/5/02
EFFECTIVE 1/1/03

SCHEDULE B-2

ILLINOIS MUNICIPAL ELECTRIC AGENCY
ECONOMIC DEVELOPMENT RATE SCHEDULE

1. **Applicability.** This Economic Development Rate Schedule B-2, ("Schedule B-2") is applicable to electric service provided by the Agency to Participating Members for meeting the requirements of certain of the Participating Member's retail customers subject to the following conditions:

(a) The Participating Member must limit its charges to the customer receiving the Schedule B-2 rate to the Participating Member's actual power and energy costs from the IMEA for the customer plus no more than a 10% markup plus compensation for capacity and energy losses and the Member's normal amortization for any new transmission and/or distribution facilities used to serve said customer,

(b) The customer has established a peak load of at least 150 kW, or will be adding a new load of at least 150 kW,

(c) The customer has not been in business at the same location or another location within the Participating Member's service territory for more than 60 days at the time service commences under such Economic Development Rate Schedule, or

(d) The customer is adding a load of 150 kW or more, which must be metered separately, at his existing location at the time service commences under such Economic Development Rate Schedule, and the customer has taken service from the Participating Member at that location for the previous 12 months,

(e) The customer was neither an end use customer of another Participating Member nor an end use customer of a non-participating member immediately prior to locating within a Participating Member's service territory.

2. **Availability.** This Schedule B-2 is available on or after January 1, 1993 to the Participating Members paying 30 year debt service provided such additional load can be served without incurring additional debt or otherwise increasing the cost to the other Participating Members. The opportunity of applying for such service shall be available to said Participating Members until December 31, 2003 unless such opportunity period is extended by the Agency Board of Directors. Once an application for such service is approved by the Agency staff, said service shall be provided for a period of three (3) years beginning on either the date service is first provided under this Schedule B-2 or six months after the approval date, whichever comes first.

3. **Character of Service.** Electricity furnished under this Schedule B-2 at one or more Points of Delivery as set forth in Schedule A shall be sixty hertz, three phase, alternating current.

4. **Billing Rates.** For electricity furnished hereunder, the monthly charges for each Billing Period shall be determined as follows:

(a) **Billing Demand Charge.** The initial monthly billing demand charge shall be equal to the monthly Non-Debt Demand charge for Power Supply made by the Agency to all Participating Members plus the Members applicable Delivery Service Charge, as outlined in Schedule B. On each anniversary date of service as determined under Section 2, the demand charge for qualifying economic development capacity shall be increased an amount which is equal to 33.3% of the then current 30 Year Debt Service Monthly Demand Charge. The final adjustment after the third year shall bring the rate in line with IMEA's regular Schedule B rate.

(b) **Billing Energy Charge.** For each month, the energy usage of the Participating Member's qualifying economic development customer(s) will be treated in the same manner as all other energy usage by the Participating Member and its customers, and will be included in and billed as a part of the Participating Member's billing energy under Schedule B of the Power Sales Contract.

(c) **Changes in Billing Rates.** Changes, additions or deletions to this Economic Development Rate Schedule will be considered on an annual basis, and may be adopted upon approval of the Board of Directors. Such changes will not affect those economic development customers previously approved by the Agency except for rate changes.

5. **Billing Demand.** Each month, the Participating Member shall provide to the Agency a list showing the name of each customer it is serving under the provisions of this Economic Development Rate Schedule and the hourly demands supplied to each such customer in a form acceptable to the Agency. The billing demand will be computed as the demand in kilowatts of the Participating Member's qualifying customer(s) coincident with the Participating Member's billing demand under Schedule B of the Power Sales Contract. The total demand supplied to all such customers shall be adjusted to account for transformer losses if applicable and the aggregate amount shall be the total demand.

6. **Schedule B.** The Participating Member's total demand requirements for each month shall be reduced by the amount of coincident demand supplied under this Schedule B-2 to determine the Billing Demand under Schedule B.

7. **Notice.** Each Participating Member with a qualifying economic development customer shall give written notice to the Agency at least thirty (30) days in advance of the commencement of service to any new electric load to be served under this Schedule B-2 and shall commence service hereunder only after having received written approval therefore from the Agency staff and all metering as required by the Agency has been placed in service by the Participating Member at its expense.

APPROVED 12/5/02
EFFECTIVE 1/1/03

SCHEDULE B-3

ILLINOIS MUNICIPAL ELECTRIC AGENCY
ECONOMIC DEVELOPMENT RATE SCHEDULE

1. **Applicability.** This Economic Development Rate Schedule B-3, ("Schedule B-3") is applicable to electric service provided by the Agency to Participating Members for meeting the requirements of certain of the Participating Member's retail customers subject to the following conditions:

(a) The Participating Member must limit its charges to the customer receiving the Schedule B-3 rate to the Participating Member's actual power and energy costs from the IMEA for the customer plus no more than a 10% markup plus compensation for capacity and energy losses and the Member's normal amortization for any new transmission and/or distribution facilities used to serve said customer,

(b) The customer has established a peak load of at least 2000 kW, or will be adding new load of at least 2000 kW,

(c) The customer has not been in business at the same location or another location within the Participating Member's service territory for more than 60 days at the time service commences under such Economic Development Rate Schedule, or

(d) The customer is adding a load of 2000 kW or more which must be metered separately, at his existing location, at the time service commences under such Economic Development Rate Schedule, and the customer has taken service from the Participating Member at that location for the previous 12 months,

(e) The customer was neither an end use customer of another Participating Member nor an end use customer of a non-participating member immediately prior to locating within a Participating Member's service territory.

2. **Availability.** This Schedule B-3 is available to each Participating Member provided that the requesting Member guarantees the payment of any and all amounts billed relative to providing service under this Schedule B-3 for the entire period for which a liability may be incurred by the Agency. This guarantee shall include but not be limited to such payments as demand, energy, reserves, energy losses, scheduled demand and energy not taken, cancellation charges, penalties, emergency power and wheeling provisions related to providing service under this Schedule B-3. Any Member may request service for customer(s) under this rate schedule on or after January 1, 1993, but such period for making requests shall not extend beyond December

31, 2003, unless such period is extended by the Agency Board of Directors. All applications must be submitted to the Agency at least 120 days in advance of commencement of service and are subject to approval or denial by the Agency staff depending upon whether or not a power supply can be arranged for such service that meets the requirements of the member and does not require that the Agency incur additional debt. After requesting and receiving approval for service under Schedule B-3 for a one (1) to three (3) year period, the Member shall remain committed for all costs pertaining thereto for the entire contract period and such customer service will not be converted to any other type service that the Agency may have available at the time. Should the Member requesting such service no longer have a use for it and the Agency can get all or a portion of the charges abated or the Agency can convert such service for the use of other members, the Agency will relieve said Member for a like amount of charges.

3. **Character of Service.** Electricity furnished under this Schedule B-3 at one or more Points of Delivery as set forth in Schedule A shall be sixty-hertz, three phase, alternating current.

4. **Billing Rates.** For electricity furnished hereunder, the monthly charges for each Billing Period shall be determined as follows:

(a) **Billing Demand Charge.** The monthly demand shall be equal to the accumulated demand charges incurred by the Agency either by schedule or actual demand related charges plus all direct charges relative to wheeling and losses related to the service from the source of power to the requesting Member power system. Any demand scheduled but not taken shall be billed as if it were actually provided.

(b) **Billing Energy Charge.** For each month, the energy charge for the Member's customer shall be determined by the summation of energy scheduled or actual consumption whichever is greater. Any energy scheduled but not taken shall be billed as if it were actually provided. All energy so determined will be billed at the rate contracted for by IMEA when arranging the power supply for the Schedule B-3 customer.

(c) **Other Charges.** Any charges or liability for charges directly or indirectly related to this service, such as power factor correction or load factor adjustment related to service to this customer shall be billed to the Member.

(d) **Agency Charge.** The Agency shall increase the bill to the Member ten percent (10%) above the amounts calculated in (a), (b) and (c) above unless a lessor amount is approved by the Agency Board of Directors.

5. **Scheduling by Member.** Each Member under this Schedule B-3 shall provide to the Agency dispatch center the schedules required in order to schedule the power and energy to the Member system. The schedule for Tuesday through Friday deliveries must be provided to the Agency by 8:00 a.m. on the day before the power is to be received. The schedule for Saturday, Sunday and Monday deliveries must be provided by Friday at 8:00 a.m. When holidays are encountered, the Member shall provide the data as required by the Agency. The Agency will

notify the Member when these schedules are due. Failure to provide these schedules will require the Member to curtail all power and energy usage under this Schedule B-3 from the Agency.

6. **Equipment to be provided by Member.** The Agency will determine at the time of request by the Member what, if any, equipment may be required for interface with the Agency SCADA system. All capital, operating and maintenance expenses for such equipment shall be at the Member's expense. The minimum metering requirement shall be separate metering sufficient to provide data to the Agency to determine actual hourly demand and energy usage for each customer on this rate Schedule B-3. This data shall be provided on computer disks in a form and format which can be utilized directly by Agency computers.

7. **Schedule B.** The Participating Member's total demand requirements for each month shall be reduced by the amount of coincident demand supplied under this Schedule B-3 to determine the Billing Demand under Schedule B.

SCHEDULE B-4

ILLINOIS MUNICIPAL ELECTRIC AGENCY
LOAD RETENTION RATE SCHEDULE

1. **Applicability.** This Load Retention Rate Schedule B-4, ("Schedule B-4") is applicable to electric service provided by the Agency to Participating Members for meeting the requirements of certain of the Participating Member's retail customers subject to the following conditions:

(a) The Participating Member must limit its charges to the customer receiving the Schedule B-4 rate to the Participating Member's actual power and energy costs from the IMEA for the customer plus no more than a 10% markup plus compensation for capacity and energy losses and the Member's normal amortization for any new transmission and/or distribution facilities used to serve said customer,

(b) The Participating Member must have a Customer at Risk with a load of 1,000 kW or 25% of the Member's peak load either of which must be registered during the Member's monthly peak at least five months during any calendar year.

(c) A Participating Member's retail customer is considered at risk if it can legally be served through facilities owned by another supplier or can be lost due to relocation, bankruptcy or self-generation.

(d) If a Participating Member has a Customer At Risk that it is certain to lose unless the customer receives some rate relief, representatives of the Member may request a portion of said relief from the Agency by presenting their position at a hearing before the Executive Board.

(e) The Member must prove to the satisfaction of at least 5 members of the Executive Board that it indeed has a Customer at Risk that it is certain to lose unless IMEA grants rate relief. Proof must be in the form of written documents such as offers from other utilities, bankruptcy filings, financial reports and relocation analyses, or other verifiable information. The Member must have done everything it can possibly do locally to retain the customer prior to the request.

(f) The Member must provide all information requested by the Executive Board, including but not limited to, cost of service studies, current rate schedules, specific costs to serve the Customer At Risk, the current and proposed rate to serve said customer, the markup between costs and charges to serve said customer, twelve months of historical billing data for said customer and a diagram showing facilities to serve said customer.

2. **Availability.** This Schedule B-4 is available on or after January 1, 1993 to the Participating Members paying 30-year debt service. The opportunity of applying for such service shall be available to said Participating Members until December 31, 2003 unless such opportunity period

is extended by the Agency Board of Directors. Once an application for such service is approved by at least five (5) Members of the Executive Board, said service shall be provided for a period of one (1) year unless a longer contract is approved by the IMEA Board of Directors.

3. **Character of Service.** Electricity furnished under this Schedule B-4 at one or more Points of Delivery as set forth in Schedule A shall be sixty-hertz, three phase, alternating current.
7
4. **Billing Rates.** For electricity furnished hereunder, the monthly charges for each Billing Period shall be determined as follows:

(a) **Billing Demand Charge.** The demand charge for this service shall be the Agency's regular demand charges based on the customer's contribution to the Member's peak monthly demand but shall not include any debt service charge.

(b) **Billing Energy Charge.** For each month, the energy usage of the Participating Member's Customer At Risk will be treated in the same manner as all other energy usage by the Participating Member and its customers, and will be included in and billed as a part of the Participating Member's billing energy under Schedule B of the Power Sales Contract.

(c) **Changes in Billing Rates.** Changes, additions or deletions to this Load Retention Rate Schedule will be considered on an annual basis, and may be adopted upon approval of the Board of Directors. Such changes will not affect those economic development customers previously approved by the Agency except for rate changes.

5. **Billing Demand.** Each month, the Participating Member shall provide to the Agency a list showing the name of each customer it is serving under the provisions of this Load Retention Rate Schedule and the hourly demands supplied to each such customer in a form acceptable to the Agency. The billing demand will be computed as the demand in kilowatts of the Participating Member's qualifying customer(s) coincident with the Participating Member's billing demand under Schedule B of the Power Sales Contract. The total demand supplied to all such customers shall be adjusted to account for transformer losses if applicable and the aggregate amount shall be the total demand.

6. **Schedule B.** The Participating Member's total demand requirements for each month shall be reduced by the amount of coincident demand supplied under this Schedule B-4 to determine the Billing Demand for payment of non-debt demand service under Schedule B.

7. **Notice.** Each Participating Member making a request for service under this Load Retention Rate Schedule shall give written notice to the Agency at least thirty (30) days in advance of presenting their position at a hearing before the Executive Board. The Member, at its expense, shall install metering which provides sufficient data to bill the Member in accordance with the Rate Schedule B-4 and is compatible with the Agency's SCADA system.

APPROVED 12/5/02
EFFECTIVE 1/1/03

SCHEDULE B-5

ILLINOIS MUNICIPAL ELECTRIC AGENCY
ECONOMIC DEVELOPMENT RATE SCHEDULE

1. **Applicability.** This Economic Development Rate Schedule B-5, ("Schedule B-5") is applicable to electric service provided by the Agency to Participating Members for meeting the requirements of certain of the Participating Member's retail customers subject to the following conditions:

(a) The Participating Member must limit its charges to the customer receiving the Schedule B-5 rate to the Participating Member's actual power and energy costs from the IMEA for the customer plus no more than a 10% markup plus compensation for capacity and energy losses and the Member's normal amortization for any new transmission and/or distribution facilities used to serve said customer,

(b) The customer has established a peak load of 100 kW which will increase to 2,000 kW or more during the first three years of service under this Schedule B-5,

(c) The customer has not been in business at the same location or another location within the Participating Member's service territory for more than 60 days at the time service commences under such Economic Development Rate Schedule, or

(d) The customer is adding a load of 2,000 kW or more which must be metered separately, at his existing location, at the time service commences under such Economic Development Rate Schedule, and the customer has taken service from the Participating Member at that location for the previous 12 months,

(e) The customer was neither an end use customer of another Participating Member nor an end use customer of a non-participating member immediately prior to locating within a Participating Member's service territory.

2. **Availability.** This Schedule B-5 is available to each Participating Member provided that the requesting Member guarantees the payment of any and all amounts billed relative to providing service under this Schedule B-5 for the entire period for which a liability may be incurred by the Agency. This guarantee shall include but not be limited to such payments as demand, energy, reserves, energy losses, scheduled demand and energy not taken, cancellation charges, penalties, emergency power and wheeling provisions related to providing service under this Schedule B-5. Any Member may request service for customer(s) under this rate schedule on or after December 14, 1995, but such period for making requests shall not extend beyond December 31, 2003, unless such period is extended by the Agency Board of Directors. All applications should normally be made at least 30 days in advance of commencement of service

and are subject to approval or denial by the Agency staff depending upon whether or not a power supply can be arranged for such service that meets the requirements of the member and does not require that the Agency incur additional debt. After requesting and receiving approval for service under Schedule B-5, the Member shall remain committed for all costs pertaining thereto for the entire contract period and such customer service will not be converted to any other type service that the Agency may have available at the time. Should the Member requesting such service no longer have a use for it and the Agency can get all or a portion of the charges abated the Agency will relieve said Member for a like amount of charges. Likewise, if the Agency can convert all or a portion of such service for the use of other members the Agency will relieve the Member of the costs for that portion.

At the time the Member requests service under Schedule B-5 for such customer, the Member must provide the Agency with a schedule of load requirements to be served by IMEA from start-up through the early phases of operation by the customer until a load of at least 2,000 kW is reached and any further anticipated growth within the first six years. The Member must schedule the load of the customer to reach at least 2,000 kW during the first three years of providing service under Schedule B-5.

If the customer's actual load does not qualify the Member for service under Rate Schedule B-5 at the end of the initial three year period, the Member shall purchase service for the customer load from the Agency under Rate Schedule B and shall pay the Agency the appropriate demand charge related thereto for the capacity utilized. The Member shall not have to pay for a like amount of capacity originally scheduled under Schedule B-5, but shall be responsible for the costs incurred by the Agency for the additional capacity originally scheduled unless relieved of same as per Section 2. Likewise, if the Member over schedules its requirements under Schedule B-5, it shall be responsible for those costs incurred by the Agency. The Member may not use over scheduled capacity to serve other loads on its system.

If the customer achieves a load greater than that which was originally scheduled by the Member, then the Member must purchase the additional customer requirements from the Agency under Schedule B. Ordinarily, all schedules for Schedule B-5 service must be in increments of one megawatt.

3. **Character of Service.** Electricity furnished under this Schedule B-5 at one or more Points of Delivery as set forth in Schedule A of the Power Sales Contract shall be sixty-hertz, three phase, alternating current.

4. **Initial Billing Rates.** During the period of time in which the actual load of the Member's customer is under 2,000 kW, up to a maximum of three years, the monthly charges for each Billing Period shall be determined as follows for electricity furnished hereunder:

(a) **Billing Demand Charge.** The initial monthly billing demand charge shall be equal to the monthly Non-Debt Demand charge for Power Supply made by the Agency to all Participating Members plus the Members applicable Delivery Service Charge, as outlined in Schedule B. On each anniversary date of service as determined under Section 2, the demand charge for qualifying economic development capacity shall be increased an amount which is equal to 33.3% of the then current 30 Year Debt Service Monthly Demand Charge.

(b) **Billing Energy Charge.** For each month, the energy usage of the Participating Member's qualifying economic development customer(s) will be treated in the same manner as all other energy usage by the Participating Member and its customers, and will be included in and billed as a part of the Participating Member's billing energy under Schedule B of the Power Sales Contract.

(c) **Changes in Billing Rates.** Changes, additions or deletions to this Economic Development Rate Schedule will be considered on an annual basis, and may be adopted upon approval of the Board of Directors. Such changes will not affect those economic development customers previously approved by the Agency except for rate adjustments.

5. **Billing Rates At 2,000 kW or Above.** Based on the load schedule provided to the Agency by the Member under Section 2, the Agency will put forth its best efforts to secure a power supply to serve the load commencing on the date when the new load is scheduled to reach 2,000 kW or more and ending no later than three years hence. Such date must fall within the first three years of providing service under Schedule B-5. On the date the Member contracts for delivery of 2,000 kW or more for its B-5 customer and the customer load actually reaches at least 2,000 kW, the Member will have the monthly charges for each Billing Period determined as follows for electricity furnished hereunder:

(a) **Billing Demand Charge.** The monthly demand shall be equal to the accumulated demand charges incurred by the Agency for the Member's customer either by schedule or actual demand related charges plus all direct charges relative to wheeling and losses related to the service from the source of power to the requesting Member power system. Any demand scheduled but not taken shall be billed as if it were actually provided, except for those conditions described in Section 2.

(b) **Billing Energy Charge.** For each month, the energy charge for the Member's customer shall be determined by the summation of energy scheduled or actual consumption whichever is greater. Any energy scheduled but not taken shall be billed as if it were actually provided. All energy so determined will be billed at the rate contracted for by IMEA when arranging the power supply for the Schedule B-5 customer.

(c) **Other Charges.** Any charges or liability for charges directly or indirectly related to this service, such as power factor correction or load factor adjustment related to this service shall be billed to the Member.

(d) **Agency Charge.** The Agency shall increase the bill to the Member ten percent (10%) above the amounts calculated in (a), (b) and (c) above unless a lessor amount is approved by the Agency Board of Directors.

(e) **Scheduling by Member.** Each Member under this Schedule B-5 shall provide to the Agency dispatch center the schedules required in order to schedule the power and energy to the Member system. The schedule for Tuesday through Friday deliveries must be provided to the Agency by 8:00 a.m. on the day before the power is to be received. The schedule for Saturday, Sunday and Monday deliveries must be provided by Friday at 8:00 a.m. When holidays are encountered, the Member shall provide the data as required by the Agency. The Agency will notify the Member when these schedules are due. Failure to provide these schedules will require the Member to curtail all power and energy usage under this Schedule B-5 from the Agency.

6. **Equipment to be provided by Member.** The Agency will determine at the time of request by the Member for Schedule B-5 service what, if any, equipment may be required for interface with the Agency SCADA system. All capital, operating and maintenance expenses for such equipment shall be at the Member's expense. The minimum metering requirement shall be separate metering sufficient to provide data to the Agency to determine actual hourly demand and energy usage for each customer on this rate Schedule B-5. This data shall be provided on computer disks in a form and format which can be utilized directly by Agency computers.

7. **Schedule B.** The Participating Member's total demand requirements for each month shall be reduced by the amount of actual coincident demand supplied under this Schedule B-5 to determine the Billing Demand under Schedule B.

APPROVED 12/5/02
EFFECTIVE 1/1/03

SCHEDULE B-6

ILLINOIS MUNICIPAL ELECTRIC AGENCY
ECONOMIC DEVELOPMENT RATE SCHEDULE

1. **Applicability.** This Economic Development Rate Schedule B-6, ("Schedule B-6") is applicable to electric service provided by the Agency to Participating Members for meeting the requirements of certain of the Participating Member's retail customers subject to the following conditions:

(a) The Participating Member must limit its charges to the customer receiving the Schedule B-6 rate to the Participating Member's actual power and energy costs from the IMEA for the customer plus no more than a 10% markup plus compensation for capacity and energy losses and the Member's normal amortization for any new transmission and/or distribution facilities used to serve said customer,

(b) The customer is expected to establish a peak load of at least 1000 kW, or will be adding a new load of at least 1000 kW,

(c) The customer has not been in business at the same location or another location within the Participating Member's service territory for more than 60 days at the time service commences under such Economic Development Rate Schedule, or

(d) The customer is adding a load of 1000 kW or more, which must be metered separately, at its existing location at the time service commences under such Economic Development Rate Schedule, and the customer has taken service from the Participating Member at that location for the previous 12 months,

(e) The customer was neither an end use customer of another Participating Member nor an end use customer of a non-participating member immediately prior to locating within a Participating Member's service territory.

2. **Availability.** This Schedule B-6 is available on or after February 29, 1996 to the Participating Members provided such additional load can be served without incurring additional debt. The opportunity of applying for such service shall be available to said Participating Members until December 31, 2003 unless such opportunity period is extended by the Agency Board of Directors. Once an application for such service is approved by the Agency staff, said service shall be provided for a period of five (5) years for 30-year debt service Members and three (3) years for fixed debt service Members beginning on either the date service is first provided under this Schedule B-6 or six months after the approval date, whichever comes first. If the customer has not reached the threshold of 1000 kW within twelve months of the date service is first provided, service shall thereafter continue under rate Schedule B or Schedule B-2

whichever is applicable and the Participating Member shall be back charged for the difference in the applicable rate and rate Schedule B-6 during the first 12 months of service.

3. **Character of Service.** Electricity furnished under this Schedule B-6 at one or more Points of Delivery as set forth in Schedule A shall be sixty-hertz, three phase, alternating current.

4. **Billing Rates.** For electricity furnished hereunder, the monthly charges for each Billing Period shall be determined as follows:

(a) **Billing Demand Charge.** The initial monthly billing demand charge including the Members applicable Delivery Service Charge shall be equal to $5.35 per kilowatt ("kW") of Billing Demand. The annual monthly billing demand charges shall be as follows:

MEMBERS WITH DELIVERY VOLTAGE LESS THAN 100 kV

	30-Year Debt Service Members		**Fixed Debt Service Members**
	Non-Debt	Debt Service	Non-Debt
Year 1	$5.35	$0.00	$5.35
Year 2	$6.78	$0.00	$6.78
Year 3	$8.21	$0.00	$8.21
Year 4	$9.50	$0.14	Schedule B
Year 5	$9.50	$1.57	Schedule B

MEMBERS WITH DELIVERY VOLTAGE AT 100 kV AND ABOVE

	30-Year Debt Service Members		**Fixed Debt Service Members**
	Non-Debt	Debt Service	Non-Debt
Year 1	$5.35	$0.00	$5.35
Year 2	$6.78	$0.00	$6.78
Year 3	$8.21	$0.00	$8.21
Year 4	$9.00	$0.64	Schedule B
Year 5	$9.00	$2.07	Schedule B

As shown in the above schedule, on each anniversary date of service as determined under Section 2, the demand charge for qualifying economic development capacity shall be increased an amount which is equal to 20% of the difference between the initial monthly billing demand charge and the total of the then current applicable Non-Debt Demand Charge(s) for Members with delivery

voltage less than 100 kV and Debt Service Demand Charge(s) as outlined in Schedule B.

Beginning in Year 4, the fixed debt service Members will begin paying the full non-debt demand charges as outlined in Schedule B and shall not incur any additional debt service charges.

For 30-year debt service Members, the final adjustment after the fifth year shall bring the rate in line with IMEA's regular Schedule B rate.

(b) **Billing Energy Charge.** For each month, the energy usage of the Participating Member's qualifying economic development customer(s) will be treated in the same manner as all other energy usage by the Participating Member and its customers, and will be included in and billed as a part of the Participating Member's billing energy under Schedule B of the Power Sales Contract.

(c) **Changes in Billing Rates.** Changes, additions or deletions to this Economic Development Rate Schedule will be considered on an annual basis, and may be adopted upon approval of the Board of Directors. Such changes will not affect those economic development customers previously approved by the Agency except for rate changes.

5. **Billing Demand.** Each month, the Participating Member shall provide to the Agency a list showing the name of each customer it is serving under the provisions of this Economic Development Rate Schedule and the hourly demands supplied to each such customer in a form acceptable to the Agency. The billing demand will be computed as the demand in kilowatts of the Participating Member's qualifying customer(s) coincident with the Participating Member's billing demand under Schedule B of the Power Sales Contract. The total demand supplied to all such customers shall be adjusted to account for transformer losses if applicable and the aggregate amount shall be the total demand.

6. **Schedule B.** The Participating Member's total demand requirements for each month shall be reduced by the amount of coincident demand supplied under this Schedule B-6 to determine the Billing Demand under Schedule B.

7. **Notice.** Each Participating Member with a qualifying economic development customer shall give written notice to the Agency at least thirty (30) days in advance of the commencement of service to any new electric load to be served under this Schedule B-6 and shall commence service hereunder only after having received written approval therefore from the Agency staff and all metering as required by the Agency has been placed in service by the Participating Member at its expense.

SCHEDULE D

MEMBERS LONG TERM POWER CONTRACTS FOR SALES

ADDENDUM TO POWER SALES CONTRACT

This Addendum to the Power Sales Contract between the Illinois Municipal Electric Agency and the Village of Chatham is made this 22nd day of February, 2005, by and between the ILLINOIS MUNICIPAL ELECTRIC AGENCY, a municipal corporation and unit of local government of the State of Illinois, and the VILLAGE OF CHATHAM, an Illinois municipal corporation.

WHEREAS, the Illinois Municipal Electric Agency ("IMEA" or "Agency") and the Village of Chatham ("Chatham") have entered into a Power Sales Contract, dated March 11, 2003, pursuant to which Chatham agreed to purchase and the IMEA agreed to provide and sell, subject to certain limitations, all of the electric power and energy required for the operation of Chatham's municipal electric utility for a term commencing on May 1, 2003 and extending through September 30, 2035; and

WHEREAS, the Power Sales Contract between IMEA and Chatham required Chatham to continue to pay rates and charges according to the Wholesale Power Supply Agreement between IMEA and Chatham dated April 26, 2001 until June 1, 2006 at which time Chatham would begin paying rates and charged under Section 3, Rates and Charges, of the Power Sales Contract, and

WHEREAS, IMEA and Chatham have agreed to amend the Power Sales Contract as set forth herein to allow Chatham to begin paying the Rates and Charges under Section 3 of the Power Sales Contract on March 1, 2005.

NOW, THEREFORE, the Illinois Municipal Electric Agency and the Village of Chatham hereby agree as follows:

1. Section 1 of the Power Sales Contract is hereby deleted in its entirety and replaced with the following language:

Section 1. Term

(a) Initial Term and Termination

This Contract shall take effect on May 1, 2003 and shall remain in effect for an initial term through September 30, 2035 and thereafter from year to year until terminated by five (5) years prior written notice. In no event shall this Contract extend beyond September 30, 2040. Section 3, Rates and Charges, shall become effective on March 1, 2005 and shall continue in effect throughout the remainder of the term of this Contract. During the term of the Contract between the effective date of the Contract and March 1, 2005, Member shall continue to pay rates and charges according to the current Wholesale Power Supply Agreement between IMEA and the Member dated April 26, 2001.

(b) Conditions for Effectiveness of Contract

[Blank]

(c) Commencement of Service and Cancellation of Existing Contract

Service to the Member under this Contract shall commence on May 1, 2003. Until the Agency commences the service under this Power Sales Contract, it shall continue to provide electric power and energy and the Member shall continue to take electric power and energy pursuant to the Wholesale Power Supply Agreement between the Agency and the Member dated April 26, 2001. Simultaneously with the commencement of service under this Contract, the present Wholesale Power Supply Agreement between the Member and the Agency shall be terminated and be superseded by this Contract, except that during the period from the effective date of this Contract and March 1, 2005, Member shall continue to be charged rates and charges according to the Wholesale Power Supply Agreement between IMEA and Member dated April 26, 2001.

All other power supply or transmission contracts between the Member and any entity other than the Agency shall be terminated or assigned by the Member to the Agency no later than the date upon which the Agency commences service to the Member as provided in this subparagraph or such other action is taken as mutually agreeable by the Agency and the Member.

If the Member is taking power or transmission service from a supplier other than IMEA on such commencement date, the providing of power by IMEA, shall commence only if that Member's obligations from such supplier have ceased pursuant to an assignment or termination of an existing contract.

2. Section 3 of the Power Sales Contract is hereby deleted in its entirety and replaced with the following language:

Section 3. Rates and Charges

As stated in Section 1 (a), this Section 3 shall become effective on March 1, 2005. During the period from the effective date of this Contract and March 1, 2005, Member shall continue to be charged rates and charges under the Wholesale Power Supply Agreement between IMEA and Member dated April 26, 2001.

The Member shall pay the Agency for all power and energy and other services furnished under this Contract from March 1, 2005 at the rates and on the terms and conditions set forth in the Rate Schedule, as the Rate Schedule may be changed and supplemented by the Agency's Board of Directors from time to time.

The Agency's Board of Directors shall establish and maintain its rates and charges under its Power Sales Contracts with its Participating Members to provide revenues which are sufficient, but only sufficient, together with other available revenues of the

Agency, to cover the estimated Revenue Requirements of the Agency. In determining rates and charges necessary to produce sufficient revenues, the Agency shall take into account any anticipated (or actual) delinquency or default in payments by Participating Members. The Agency's rates and charges shall be set generally on a uniform postage stamp basis so as to recover all production and transmission costs in providing service to all Participating Members; provided, however, that the rates and charges may vary between Participating Members to reflect contracts with Participating Members having varying lengths of terms, the effect on rates for Participating Members selecting the option provided for in Section 1(d) of this Contract, differences in delivery voltage level, delivery facilities costs, different load factors, and variances in service provided to Participating Members which enter into Capacity Purchase Agreements and Participating Members which do not (including a phase-in of postage stamp rates to reflect load factors of certain Participating Members) and may contain rachets, load factor requirements and other provisions which affect all Participating Members or only Participating Members which obtain a portion of their requirements from any other source. Rates and charges may also vary between Participating Members executing Power Sales Contracts in 2003 and those who executed Power Sales Contracts in 1990 and who will have paid a full proportionate share of debt service for the Agency's 1990 bond financing that was refinanced in 1998. Participating Member shall pay a fixed Debt Service Payment associated with the Agency's 1990 bonds, which were refinanced in 1998. Prior to March 1, 2005, the Agency Board of Directors shall establish a schedule of such payments based on the Agency's then current 30 year debt service demand charge set forth in Schedule B and Participating Member's monthly billing demands for the most recent twelve months. Such calculation shall establish the monthly fixed Debt Service Payment associated with such bonds which shall be paid each month by the Participating Member until such time as the debt service associated with the 1998 Power Supply System Revenue Refunding Bonds are fully paid and retired by the Agency. The methodology for establishing rates and charges used by the Agency may be modified by the Agency from time to time.

The Agency shall place into effect initial rates and charges applicable on commencement of service by the Agency to the Participating Members and thereafter at such intervals as it shall determine appropriate, but in any event not less frequently than once in each calendar year, the Agency shall review and, if necessary, revise its rates and charges under the Power Sales Contracts, to ensure that the rates and charges there under cover the Agency's estimated Revenue Requirements.

The Agency's rates and charges hereunder may include one or more automatic adjustment clauses which may be modified or changed periodically to insure that the Agency is protected against changing cost of fuel, purchased power, taxes, and other costs of service. The automatic adjustment clauses may use estimated costs, with a later true-up to actual costs. The Agency may place an automatic adjustment clause in effect to recover costs from the date they were incurred upon thirty (30) days notice

to the Member and shall provide the Member supporting information which need not be the same detailed analysis as for base rate changes.

In connection with any revision of the Rate Schedule, except as to automatic adjustment clause rate changes, the Agency shall cause a notice in writing to be given to all Participating Members which shall set out any proposed revision of the Rate Schedule with the effective date thereof, which shall be not less than sixty (60) days after the date of the mailing of the notice, and which shall be accompanied by an analysis of the estimated Revenue Requirements for which the Rate Schedule is proposed to be revised and the derivation of the proposed rate. The Member agrees to pay for electric power and energy made available by the Agency to it hereunder after the effective date of any revisions in the Rate Schedule in accordance with the Rate Schedule as so revised.

3. It is agreed between the parties that in the event there is a conflict between the provisions of this Addendum and provisions of the Power Sales Contract that the provisions of this Addendum shall prevail and control.

IN WITNESS THEREOF the parties have authorized the execution of this Addendum and have caused their duly authorized representatives to sign as of the day and year first written above.

ILLINOIS MUNICIPAL ELECTRIC AGENCY

General Manager & CEO

ATTEST:

Administrative Manager

VILLAGE OF CHATHAM, ILLINOIS

Thomas S. Gray, President

ATTEST:

Pat Schad, Clerk

IMEA
IPEA • IMUA
3400 Conifer Drive, Springfield, IL 62711
217-789-4632 / Fax 217-789-4642

1984 - 2014
30
YEARS OF EXCELLENCE

Memorandum

To: IMEA Board Member

From: Tammy R. Johnson, Manager, Executive & Administrative Services

Date: June 27, 2014

Re: Updated Power Sales Contract Schedule A document

On June 25, 2014, the IMEA Board of Directors approved revisions to your Power Sales Contract Schedule A reflecting the current IMEA Points of Delivery and Metering. To minimize facility maintenance and/or compliance issues with interconnected transmission providers, descriptions of many of these Points have been refined to better define the boundaries of physical ownership. A draft of these changes was previously sent for your review and comments/corrections which have been incorporated in the final version approved by the Board.

Attached for your files is the executed original of the recently revised Schedule A.

If you have any questions, please contact Kevin Wagner or Tanner Jones at IMEA - 800-243-4632.

Thank you.

62514

REVISED SCHEDULE A

ILLINOIS MUNICIPAL ELECTRIC AGENCY
SERVICE SPECIFICATIONS

MEMBER: Village of Chatham, Illinois

1. Applicability. These service specifications are applicable to the Power Sales Contract dated as of March 11, 2003 covering the supply and delivery of electric power and energy by the Agency to the Village of Chatham, Illinois, hereinafter referred to as the "Participating Member".

2. Points of Delivery. The Agency is obligated to deliver electric power and energy contracted for by the Participating Member at the following points and voltages, which are shown in the diagram under paragraph 5 hereof:

Delivery Point Identity and Location	Delivery Voltage
a) Chatham Main Substation dead end structures for CWLP 138 kV Lines 34-3 and 34-2 (112 S. Main St.)	138 kV
b) Chatham Independence Substation dead end structures for CWLP 138 kV Lines 34-2 and 34-1 (IL Rt. 4 & Independence Ave.)	138 kV

3. Points of Measurement. The Agency shall meter electric power and energy delivered to the Participating Member as follows and as shown in the diagram under paragraph 5 hereof:

Metering Point Identity and Location	Metering Voltage
a) Chatham Main Substation, Xfmrs T1 & T2 (112 S. Main St.)	138 kV
b) Chatham Independence Substation, Xfmr T1 (IL Rt. 4 & Independence Ave.)	138 kV

4. Adjustments. Where electric power and energy are metered on the low side of a transformer at any Point of Delivery, meter readings for all electric power and energy supplied by the Agency at such metering point will be increased to compensate for transformer losses between the delivery voltage and the metering voltage.

   If there are other losses between any Point of Measurement and any Point of Delivery, an appropriate loss factor will be used to compensate for losses.

5. Diagrams. Following is a one-line diagram of the facilities at each Point of Delivery and Point of Measurement.

Approved: _____ Effective: June 25, 2014

Issued by: _____

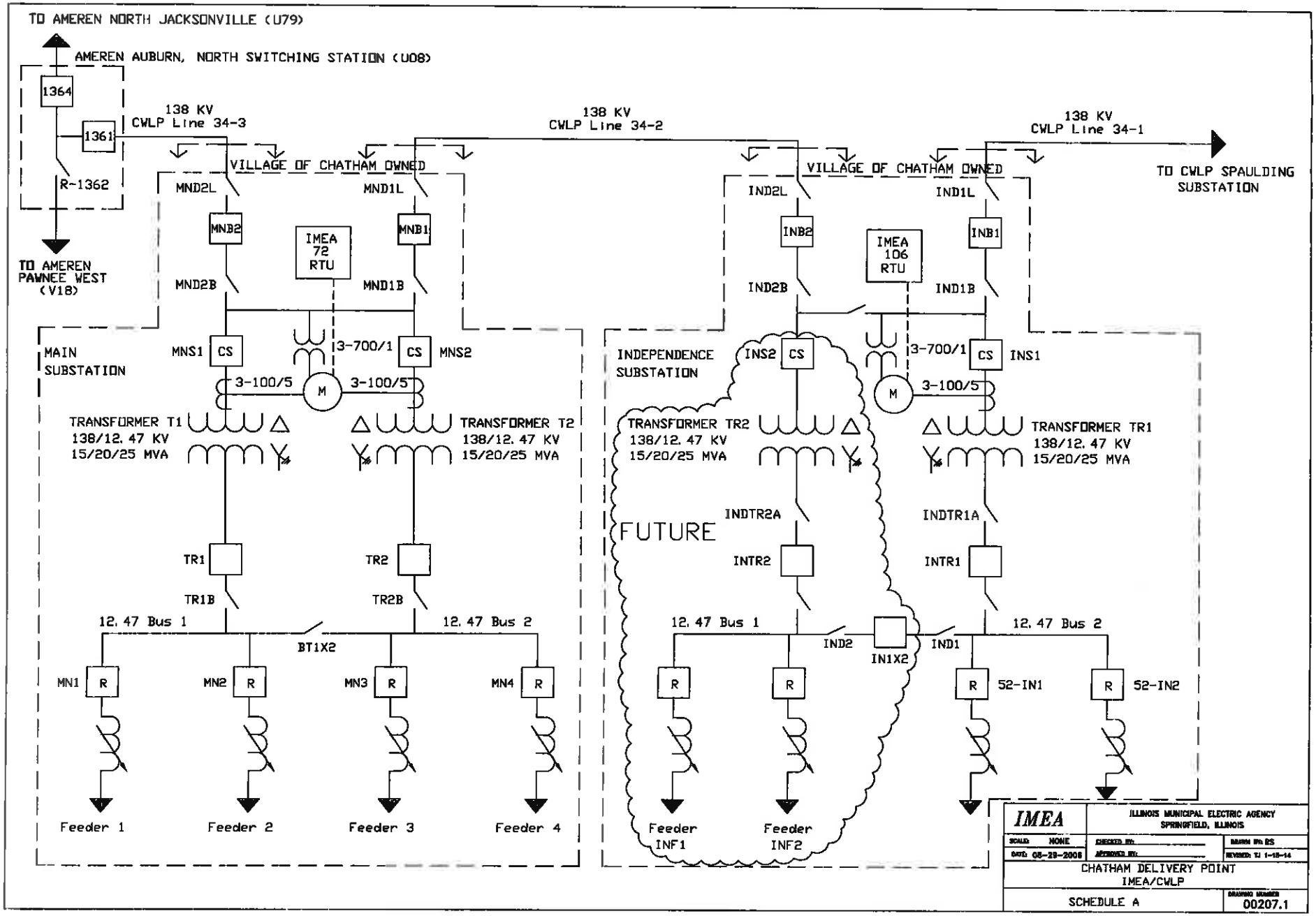
TO AMEREN NORTH JACKSONVILLE (U79)
AMEREN AUBURN, NORTH SWITCHING STATION (U08)
1364
1361
R-1362
TO AMEREN PAWNEE WEST (V18)
138 KV CWLP Line 34-3
138 KV CWLP Line 34-2
138 KV CWLP Line 34-1
TO CWLP SPAULDING SUBSTATION
VILLAGE OF CHATHAM OWNED
VILLAGE OF CHATHAM OWNED
MND2L
MND1L
MNB2
MNB1
IMEA 72 RTU
MND2B
MND1B
MAIN SUBSTATION
MNS1
CS
3-700/1
CS
MNS2
3-100/5
M
3-100/5
TRANSFORMER T1 138/12.47 KV 15/20/25 MVA
TRANSFORMER T2 138/12.47 KV 15/20/25 MVA
TR1
TR2
TR1B
TR2B
12.47 Bus 1
BT1X2
12.47 Bus 2
MN1
MN2
MN3
MN4
R
Feeder 1
Feeder 2
Feeder 3
Feeder 4
IND2L
IND1L
INB2
INB1
IMEA 106 RTU
IND2B
IND1B
INDEPENDENCE SUBSTATION
INS2
CS
3-700/1
CS
INS1
M
3-100/5
TRANSFORMER TR2 138/12.47 KV 15/20/25 MVA
TRANSFORMER TR1 138/12.47 KV 15/20/25 MVA
FUTURE
INDTR2A
INDTR1A
INTR2
INTR1
12.47 Bus 1
IND2
IN1X2
IND1
12.47 Bus 2
52-IN1
52-IN2
Feeder INF1
Feeder INF2
IMEA
ILLINOIS MUNICIPAL ELECTRIC AGENCY
SPRINGFIELD, ILLINOIS
SCALE: NONE
DATE: 08-29-2008
CHECKED BY:
APPROVED BY:
DRAWN BY: ES
REVISED: TJ 1-15-14
CHATHAM DELIVERY POINT
IMEA/CWLP
SCHEDULE A
DRAWING NUMBER
00207.1

IMEA
IPEA • IMUA
3400 Conifer Drive, Springfield, IL 62711
217-789-4632 / Fax 217-789-4642

July 29, 2015

Dear IMEA Participating Member:

In accordance with Section 3 of the Power Sales Contract, IMEA hereby gives notice of revisions to Rate Schedule B. This rate schedule was approved at the June 25, 2015 Board of Director's meeting and will become effective February 1, 2016. Please file the enclosed rate schedule with your Power Sales Contract with IMEA.

As always, call if you should have any questions.

Sincerely,

Kevin M. Gaden
President & CEO

Enclosure

SCHEDULE B

ILLINOIS MUNICIPAL ELECTRIC AGENCY
POWER SALES RATE SCHEDULE

1. Applicability. This Power Sales Rate Schedule is applicable to electric service for all requirements for municipal use and redistribution to retail customers purchased in accordance with the provisions of the Power Sales Contract, other than those requirements purchased under Schedules B-2, B-4, and B-6.

2. Availability. This Power Sales Rate Schedule is available to Participating Members of the Agency who have executed a Power Sales Contract.

3. Character of Service. Electricity furnished under this Schedule B at one or more Points of Delivery as set forth in Schedule A shall be sixty-Hertz, three phase, alternating current.

4. Billing Rates. (a) For electricity furnished under Schedule B, the related charges for each Billing Period shall be determined as follows:

Demand Charges:	
Power Supply Charge	$9.50 per kilowatt ("kW") of Billing Demand
1991 Project Charge/Payment	As set forth in Section 4(b) below
Delivery Service Charge	$3.75 per kilowatt ("kW") of Billing Demand for Members with delivery voltage less than 100 kV -OR- $2.40 per kilowatt ("kW") of Billing Demand for Members with delivery voltage of 100 kV or greater
Backup Facilities Charge	Any Member who has access to an alternative feed for which IMEA incurs separate additional charges from a Delivery Service Provider will reimburse IMEA the actual cost of such additional facilities.
Energy Charge	35.00 mills per kilowatt-hour ("kWh") for all Billing Energy
Reactive Demand Charge	$0.25 per kilo-VAr ("kVAr") for each kVAr of Maximum Lagging Reactive Billing Demand
Cost Adjustments	As set forth in Section 9 below

(b) 1991 Project Demand Charge/Payment. The 24 Participating Members who executed Power Sales Contracts in 1990 were given the option to structure their project demand charges based on 15, 20 or 30 year amortization. Participating Members executing Power Sales Contracts after March 1, 1991 (the first day of service under the 1990 Power Sales Contracts) were not given this option but rather were charged a fixed demand payment as described in 4(b)(3) below. For electricity furnished under Schedule B, the 1991 Project Demand Charge/Payment for each Billing Period shall be determined based on Items (1) (2) or (3) below:

(1) 1991 Project Demand Charge - Original 30 Year Amortization Members. In addition to the charges shown in Section 4(a) above, those 19 original Participating Members who executed Power Sales Contracts in 1990 and who elected to pay rates based on a regular thirty year amortization for debt service on the Agency's Series 1991 Revenue Bonds, which were refinanced by the Agency's Series 1998 and 2007C Revenue Refunding Bonds, shall pay the following demand charge for each Billing Period:

1991 Project Demand Charge	$2.40 per kilowatt ("kW") of Billing Demand

(2) 1991 Project Demand Payment – 15 and 20 Year Amortization Members. In addition to the charges shown in Section 4(a) above, those 5 original Participating Members who executed Power Sales Contracts in 1990 and who elected to pay rates based on an accelerated amortization period for debt service on the Agency's Series 1991 Revenue Bonds, which were refinanced by the Agency's Series 1998 and 2007C Revenue Refunding Bonds, (other than thirty years) shall pay monthly debt service payments based on the schedule provided by the Agency as amended subsequent to the Series 1998 Revenue Refunding Bond refinancing.

(3) 1991 Project Demand Payment – New Participating Members. In addition to the charges shown in Section 4(a) above, all new Participating Members that executed a Power Sales Contracts subsequent to March 1, 1991 shall pay a fixed 1991 Project Demand Payment associated with the Agency's Series 1991 Revenue Bonds, which were refinanced by the Agency's Series 1998 and 2007C Revenue Refunding Bonds. Prior to the effective date of any such Contract, the Agency shall establish a schedule of such payments based on the Agency's then current 1991 Project Demand Charge set forth in Section 4(b)(1) above and the new Participating Member's monthly billing demands for the most recent twelve months. Such calculation shall establish the monthly fixed 1991 Project Demand Payment for such new Participating Members which shall be paid each month by the Participating Member until such time as the debt service associated with the 2007C Power Supply System Revenue Refunding Bonds are fully paid and retired by the Agency.

5. Billing Metering. The metered demand in kW each Billing Period shall be the highest 60 minute integrated demand (or corrected to a 60 minute basis if demand registers other than 60 minute demand registers are installed) measured during the Billing Period.

Demand and energy meter readings shall be adjusted, if appropriate, as provided in Schedule A of the Contract.

6. Billing Demand. The Billing Demand in any Billing Period shall be the metered demand for the period as determined under paragraphs 4 and 5 giving effect to all applicable adjustments, including those for Schedules B-2, B-4, and B-6.

7. Billing Energy. The Billing Energy in any Billing Period shall be the metered energy for the period as determined under paragraphs 4 and 5 giving effect to all applicable adjustments as required, including those for Schedules B-2, B-4, and B-6.

8. Maximum Lagging Reactive Billing Demand. The Maximum Lagging Reactive Billing Demand for any billing period shall be the highest hourly summation of the flow of reactive power from IMEA to each Participating Member during the Billing Period.

9. Cost Adjustments. The Agency shall apply adjustment factors as either charges or credits on the Participating Member bills as determined from the variance in the Agency's demand and energy supply costs from those as calculated at the time of the Agency's base rate determination or to distribute revenues associated with premiums charged to certain purchasers. Adjustments for variances in demand related costs shall be accounted for using the Demand Cost Adjustment ("DCA"). Adjustments made to credit the amount collected from the premium paid by new Participating Members or other purchasers shall be accounted for using the Premium Credit Adjustment ("PCA"). Adjustments for variances in energy related costs shall be accounted for using the Energy Cost Adjustment ("ECA"). Adjustments for variances in the 2007C debt service costs shall be accounted for using the Debt Service Adjustment ("DSA"). The DCA, PCA and ECA will be applied on the invoice following the applicable month of service but shall be applied to the demand or energy usage from the prior billing period. The DCA, PCA, ECA and DSA are further defined below:

DCA: Demand related cost variance shall be computed monthly as the difference between the Agency's actual and base demand related costs. The resulting DCA factor for the period shall be calculated to the nearest $0.01 per kilowatt, using the following formula:

$$DCA = \frac{SRDC - (9.50 \text{ times } MBD)}{MBD}$$

Where:

SRDC is the total fixed costs of the Agency's System Resources used to serve the Agency's Participating Members during the prior billing period, which includes, but is not limited to, the following:

(1) Capacity payments to generating Participating Members.

(2) The demand related costs of all long term power purchased by the Agency.

(3) One-half of the monthly debt service obligation associated with the financing of Agency- owned resources and facilities other than the debt service associated with the 2007C Revenue Refunding Bonds. The debt service obligation shall include any remaining capitalized interest once a project has been placed in commercial operations and shall be proportioned monthly based on historic monthly demand.

(4) The monthly fixed operations and maintenance expense associated with the production and transmission of electricity from the Agency's own resources.

(5) A credit for the revenue collected by the Agency related to the Schedule B-6 demand charges.

(6) A credit for the revenue collected by the Agency related to the Reactive Demand Charge.

(7) A credit for the revenue collected by the Agency related to the 1991 Project Demand Payment - New Participating Members as calculated in accordance with Section 4(b)(3) above.

(8) Other monthly fixed costs, credits or Agency obligations which are considered related to the supply of capacity to the Participating Members, and are considered appropriate to charge as a demand related cost by the Board of Directors.

MBD is the total kilowatt billing demand of the Agency's Participating Members under Rate Schedule B for the prior period, excluding the kilowatt billing demand billed under the Hydro Backup Rate (See Resolution 94-6-318) and Schedule B-6.

PCA: The PCA shall be a credit paid monthly to the 29 Participating Members who executed a Power Sales Contract with IMEA prior to January 1, 2007. The premium shall be collected from the Participating Members and other purchasers on a monthly basis based on the appropriate rate methodology as contained in the respective Addendum to Power Sales Contract. The total premium amount collected from Participating Members and other purchasers shall then be credited to the 29 Participating Members based on the following formula, rounded to the nearest $0.01 per kilowatt:

$$PCA = \frac{PR \text{ times } (-1)}{MBD29}$$

Where:

PR is the total premium revenues collected for the prior month from the premium charged to Participating Members and other purchasers under their respective Addendums.
MBD29 is the total kilowatt billing demand for the prior month of the 29 Participating Members who executed a Power Sales Contract with IMEA prior to January 1, 2007.

ECA: Energy related cost variance shall be computed monthly as the difference between the Agency's actual and base energy related costs. The resulting ECA factor for the period shall be calculated, to the nearest $0.00001 per kilowatt-hour, using the following formula:

$$ECA = \frac{SREC}{MBE} - 0.03500$$

Where:

SREC is the total energy related cost of the Agency's System Resources for the Agency's Participating Members' usage during the period, which includes, but is not limited to, the following:

(1) Fuel and generation payments to generating Participating Members.

(2) The energy related costs of losses associated with transmission and distribution service charges.

(3) The costs of all long and short-term energy and all short term power purchased by the Agency.

(4) The monthly fuel and variable operations and maintenance expenses associated with the production of electricity from the Agency's own resources.

(5) One-half of the monthly debt service obligation associated with the financing of Agency- owned resources and facilities other than the debt service associated with the 2007C Revenue Refunding Bonds. The debt service obligation shall include any remaining capitalized interest once a project has been placed in commercial operations and shall be proportioned monthly based on historic monthly demand.

(6) 2.50 Mills/kWh – For the purpose of funding ongoing capital requirements and increasing the Agency's General Reserve Fund.

(7) Current year Delivery Service Charge revenue in excess of delivery service expenses, which have not yet been placed into the Renewals & Replacements Fund or otherwise used to offset delivery service expenses ("Excess Delivery Service Revenues"), may be used at the discretion of the President & CEO as a credit in this Energy Cost Adjustment ("ECA") formula. Delivery service expenses in excess of Delivery Service Charge revenue for a given month shall be added to the ECA formula if and to the extent there are no remaining Excess Delivery Service Charge Revenues for the current fiscal year.

(8) Other monthly operating costs, credits or Agency obligations which are considered related to the supply of energy to the Participating Members, and are considered appropriate to charge as an energy-related cost by the Board of Directors.

(9) At the discretion of the President & CEO, up to $1,500,000 of Rate Stabilization Account funds may be used in any month (up to a maximum of $6,000,000 in any one fiscal year) as a credit to SREC to reduce the rate impact to the Members caused by any extraordinary cost(s) which results in the average cost to the Participating Members exceeding a 10% increase over the same month of the previous year. If the President & CEO elects to use any Rate Stabilization Account funds for such purpose, then the funds will be recouped through a charge to the SREC over a period not to exceed the following 12 monthly periods.

MBE is the total kilowatt-hour billing energy for each billing period of the Agency's Participating Members.

DSA: The debt service cost variance associated with the Series 2007C Bonds shall be computed monthly as the difference between the revenue collected from the 1991 Project Demand Charge in Section 4(b)(1) above and the monthly debt service requirement ("DSR") for the 2007C Bonds. Amounts calculated for the DSA may be accumulated for several months during a fiscal year and then apportioned on a pro-rata basis to the 19 Participating Members paying the 1991 Project Demand Charge for regular 30 year debt service in accordance with Section 4(b)(1) above. Credits so accumulated shall be refunded to such Members during the fiscal year at the discretion of the President & CEO so the net amount remaining in the DSA at the end of the fiscal year is zero.

$$DSA = (2.40 \text{ times } ABD) + DSB - DSR$$

Where:

ABD is the adjusted billing demand of Participating Members paying 30 year debt service.
DSB is the debt service collected under the B-2 rate.
DSR is the actual debt service requirements for the billing period. The debt service requirement shall be proportioned monthly based on historic monthly demand.

10. Adjustment for Service to Non-Participating Members. Adjustments to the Energy Cost Adjustment may be made monthly to reflect the costs of service and revenues derived from sales by the Agency to non-participating member systems. The revenues from such sales shall be examined monthly on a case-by-case basis and any profits shall be credited to the rate stabilization account unless directed otherwise by the Board of Directors.

11. Tax Adjustment. In the event of the imposition of any tax, or payment in lieu thereof, by any lawful authority on the Agency for the purchase, production, transmission, or sale of electricity, the charges hereunder may be increased to pass on the Member its share of such tax or payment in lieu thereof.

12. Billing Period. The Billing Period shall be as nearly as practical to a calendar month.

Effective: February 1, 2016

Approved: _____
Chairman

Issued by: _____
President & CEO

SCHEDULE B-2

ILLINOIS MUNICIPAL ELECTRIC AGENCY
ECONOMIC DEVELOPMENT RATE SCHEDULE

1. **Applicability.** This Economic Development Rate Schedule B-2, ("Schedule B-2") is applicable to electric service provided by the Agency to Participating Members for meeting the requirements of certain of the Participating Member's retail customers subject to the following conditions:

(a) The Participating Member must limit its charges to the customer receiving the Schedule B-2 rate to the Participating Member's actual power and energy costs from the IMEA for the customer plus no more than a 10% markup plus compensation for capacity and energy losses and the Member's normal amortization for any new transmission and/or distribution facilities used to serve said customer, and

(b) The customer has established a peak load of at least 150 kW, or will be adding a new load of at least 150 kW, and

(c) The customer has not been in business at the same location or another location within the Participating Member's service territory for more than 60 days at the time service commences under such Economic Development Rate Schedule, or

(d) The customer is adding a load of 150 kW or more, which must be metered separately, at his existing location at the time service commences under such Economic Development Rate Schedule, and the customer has taken service from the Participating Member at that location for the previous 12 months. Notwithstanding the foregoing, separate metering of new load at existing locations shall not be required where it is not practical to meter the new load separately, and in such situations the qualifying new load shall be determined based on load added in addition to the customer's historic hourly peak for each month. If available, the customer's historic hourly peak data for the most recent 12 monthly periods shall be used to determine the customer's historic hourly peak for each month. If the peak demand data for the most recent 12 monthly periods is not available, the President & CEO may allow the best available peak demand data to be used to determine the customer's historic hourly peak, and

(e) The customer was neither an end use customer of another Participating Member nor an end use customer of a non-participating member immediately prior to locating within a Participating Member's service territory, and

(f) The customer is not owned or controlled by the Participating Member itself or a department or other subdivision thereof.

2. **Availability.** This Schedule B-2 is available on or after January 1, 1993 to the Participating Members paying the 1991 Project Demand Charge applicable to those 19 original Participating Members who executed Power Sales Contracts in 1990 and who elected to pay rates based on a regular 30 year debt service amortization under Section 4(b)(1) of Schedule B, provided such additional load can be served without incurring additional debt or otherwise increasing the cost to the other Participating Members. The opportunity of applying for such service shall be available to said Participating Members until December 31, 2016 unless such opportunity period is extended by the Agency Board of Directors. Once an application for such service is approved by the Agency staff, said service shall be provided for a period of three (3) years beginning on either the date service is first provided under this Schedule B-2 or six months after the approval date, whichever comes first.

3. **Character of Service.** Electricity furnished under this Schedule B-2 at one or more Points of Delivery as set forth in Schedule A shall be sixty hertz, three phase, alternating current.

4. **Billing Rates.** For electricity furnished hereunder, the monthly charges for each Billing Period shall be determined as follows:

(a) **Billing Demand Charge.** For the first 12 months of service, the monthly billing demand charge for the qualifying economic development capacity shall be determined based on the demand charges under Schedule B, excluding all of the 1991 Project Demand Charge under Section 4(b)(1) thereof. For the second 12 months of service, the demand charge for qualifying economic development capacity shall be determined based on the demand charges under Schedule B, excluding two-thirds (2/3) of the 1991 Project Demand Charge under Section 4(b)(1) thereof. For the third 12 months of service, the demand charge for qualifying economic development capacity shall be determined based on the demand charges under Schedule B, excluding one-third (1/3) of the 1991 Project Demand Charge under Section 4(b)(1) thereof. The final adjustment after the third year shall bring the rate in line with IMEA's regular Schedule B rate.

(b) **Billing Energy Charge.** For each month, the energy usage of the Participating Member's qualifying economic development customer(s) will be treated in the same manner as all other energy usage by the Participating Member and its customers, and will be included in and billed as a part of the Participating Member's billing energy under Schedule B of the Power Sales Contract.

(c) **Changes in Billing Rates.** Changes, additions or deletions to this Economic Development Rate Schedule will be considered on an annual basis, and may be adopted upon approval of the Board of Directors. Such changes will not affect those economic development customers previously approved by the Agency except for rate changes.

5. **Billing Demand.** Each month, the Participating Member shall provide to the Agency a list showing the name of each customer it is serving under the provisions of this Economic Development Rate Schedule and the hourly demands supplied to each such customer in a form acceptable to the Agency. The billing demand will be computed as the demand in kilowatts of the Participating Member's qualifying customer(s) coincident with the Participating Member's billing demand under Schedule B of the Power Sales Contract. The total demand supplied to all such customers shall be adjusted to account for transformer losses if applicable and the aggregate amount shall be the total demand.

6. **Schedule B.** The Participating Member's total demand requirements for each month shall be reduced by the amount of coincident demand supplied under this Schedule B-2 to determine the Billing Demand under Schedule B.

7. **Notice.** Each Participating Member with a qualifying economic development customer shall give written notice to the Agency at least thirty (30) days in advance of the commencement of service to any new electric load to be served under this Schedule B-2 and shall commence service hereunder only after having received written approval therefore from the Agency staff and all metering as required by the Agency has been placed in service by the Participating Member at its expense.

SCHEDULE B-4

ILLINOIS MUNICIPAL ELECTRIC AGENCY
LOAD RETENTION RATE SCHEDULE

1. **Applicability.** This Load Retention Rate Schedule B-4, ("Schedule B-4") is applicable to electric service provided by the Agency to Participating Members for meeting the requirements of certain of the Participating Member's retail customers subject to the following conditions:

(a) The Participating Member must limit its charges to the customer receiving the Schedule B-4 rate to the Participating Member's actual power and energy costs from the IMEA for the customer plus no more than a 10% markup plus compensation for capacity and energy losses and the Member's normal amortization for any new transmission and/or distribution facilities used to serve said customer.

(b) The Participating Member must have a Customer at Risk with a load of 1,000 kW or 25% of the Member's peak load either of which must be registered during the Member's monthly peak at least five months during any calendar year.

(c) A Participating Member's retail customer is considered at risk if it can legally be served through facilities owned by another supplier or can be lost due to relocation, bankruptcy or self-generation.

(d) If a Participating Member has a Customer At Risk that it is certain to lose unless the customer receives some rate relief, representatives of the Member may request a portion of said relief from the Agency by presenting their position at a hearing before the Executive Board.

(e) The Member must prove to the satisfaction of at least 5 members of the Executive Board that it indeed has a Customer at Risk that it is certain to lose unless IMEA grants rate relief. Proof must be in the form of written documents such as offers from other utilities, bankruptcy filings, financial reports and relocation analyses, or other verifiable information. The Member must have done everything it can possibly do locally to retain the customer prior to the request.

(f) The Member must provide all information requested by the Executive Board, including but not limited to, cost of service studies, current rate schedules, specific costs to serve the Customer At Risk, the current and proposed rate to serve said customer, the markup between costs and charges to serve said customer, twelve months of historical billing data for said customer and a diagram showing facilities to serve said customer.

2. **Availability.** This Schedule B-4 is available on or after January 1, 1993 to the Participating Members paying the 1991 Project Demand Charge applicable to those 19 Participating Members who executed Power Sales Contracts in 1990 and who elected to pay rates based on a regular 30-year debt service amortization under Section 4(b)(1) of Schedule B. The opportunity of applying

for such service shall be available to said Participating Members until December 31, 2016 unless such opportunity period is extended by the Agency Board of Directors. Once an application for such service is approved by at least five (5) Members of the Executive Board, said service shall be provided for a period of one (1) year unless a longer contract is approved by the IMEA Board of Directors.

3. **Character of Service.** Electricity furnished under this Schedule B-4 at one or more Points of Delivery as set forth in Schedule A shall be sixty-hertz, three phase, alternating current.

4. **Billing Rates.** For electricity furnished hereunder, the monthly charges for each Billing Period shall be determined as follows:

(a) **Billing Demand Charge.** The demand charge for this service shall be the Agency's regular demand charges under Schedule B based on the customer's contribution to the Member's peak monthly demand but shall not include any 1991 Project Demand Charge under Section 4(b)(1) of Schedule B.

(b) **Billing Energy Charge.** For each month, the energy usage of the Participating Member's Customer At Risk will be treated in the same manner as all other energy usage by the Participating Member and its customers, and will be included in and billed as a part of the Participating Member's billing energy under Schedule B of the Power Sales Contract.

(c) **Changes in Billing Rates.** Changes, additions or deletions to this Load Retention Rate Schedule will be considered on an annual basis, and may be adopted upon approval of the Board of Directors. Such changes will not affect those economic development customers previously approved by the Agency except for rate changes.

5. **Billing Demand.** Each month, the Participating Member shall provide to the Agency a list showing the name of each customer it is serving under the provisions of this Load Retention Rate Schedule and the hourly demands supplied to each such customer in a form acceptable to the Agency. The billing demand will be computed as the demand in kilowatts of the Participating Member's qualifying customer(s) coincident with the Participating Member's billing demand under Schedule B of the Power Sales Contract. The total demand supplied to all such customers shall be adjusted to account for transformer losses if applicable and the aggregate amount shall be the total demand.

6. **Schedule B.** The Participating Member's total demand requirements for each month shall be reduced by the amount of coincident demand supplied under this Schedule B-4 to determine the Billing Demand for payment of non-debt demand service under Schedule B.

7. **Notice.** Each Participating Member making a request for service under this Load Retention Rate Schedule shall give written notice to the Agency at least thirty (30) days in advance of presenting their position at a hearing before the Executive Board. The Member, at its expense, shall install metering which provides sufficient data to bill the Member in accordance with the Rate Schedule B-4 and is compatible with the Agency's SCADA system.

SCHEDULE B-6

ILLINOIS MUNICIPAL ELECTRIC AGENCY
ECONOMIC DEVELOPMENT RATE SCHEDULE

1. **Applicability.** This Economic Development Rate Schedule B-6, ("Schedule B-6") is applicable to electric service provided by the Agency to Participating Members for meeting the requirements of certain of the Participating Member's retail customers subject to the following conditions:

(a) The Participating Member must limit its charges to the customer receiving the Schedule B-6 rate to the Participating Member's actual power and energy costs from the IMEA for the customer plus no more than a 10% markup plus compensation for capacity and energy losses and the Member's normal amortization for any new transmission and/or distribution facilities used to serve said customer, and

(b) The customer is expected to establish a peak load of at least 1000 kW, or will be adding a new load of at least 1000 kW, and

(c) The customer has not been in business at the same location or another location within the Participating Member's service territory for more than 60 days at the time service commences under such Economic Development Rate Schedule, or

(d) The customer is adding a load of 1000 kW or more, which must be metered separately, at its existing location at the time service commences under such Economic Development Rate Schedule, and the customer has taken service from the Participating Member at that location for the previous 12 months. Notwithstanding the foregoing, separate metering of new load at existing locations shall not be required where it is not practical to meter the new load separately, and in such situations the qualifying new load shall be determined based on load added in addition to the customer's historic hourly peak for each month. If available, the customer's historic hourly peak data for the most recent 12 monthly periods shall be used to determine the customer's historic hourly peak for each month. If the peak demand data for the most recent 12 monthly periods is not available, the President & CEO may allow the best available peak demand data to be used to determine the customer's historic hourly peak, and

(e) The customer was neither an end use customer of another Participating Member nor an end use customer of a non-participating member immediately prior to locating within a Participating Member's service territory, and

(f) The customer is not owned or controlled by the Participating Member itself or a department or other subdivision thereof.

2. **Availability.** This Schedule B-6 is available on or after January 1, 2007 to the Participating Members provided such additional load can be served without incurring additional debt. The opportunity of applying for such service shall be available to said Participating Members until December 31, 2016 unless such opportunity period is extended by the Agency Board of Directors. Once an application for such service is approved by the Agency staff, said service shall be provided for a period of no more than five (5) years (or until the Participating Member would otherwise have lower rates under Schedule B as provided in Section 4 below) beginning on either the date service is first provided under this Schedule B-6 or six months after the approval date, whichever comes first. If the customer has not reached the threshold of 1000 kW within twelve months of the date service is first provided, service shall thereafter continue under rate Schedule B or Schedule B-2 whichever is applicable and the Participating Member shall be back charged for the difference in the applicable rate and rate Schedule B-6 during the first 12 months of service.

3. **Character of Service.** Electricity furnished under this Schedule B-6 at one or more Points of Delivery as set forth in Schedule A shall be sixty-hertz, three phase, alternating current.

4. **Billing Rates.** For electricity furnished hereunder, the monthly charges for each Billing Period shall be determined as follows:

(a) **Billing Demand Charge.** The monthly billing demand charge including the Member's applicable Delivery Service Charge shall be determined as follows:

Year 1	$ 9.60 per kW-month
Year 2	$10.85 per kW-month
Year 3	$12.10 per kW-month
Year 4	$13.35 per kW-month
Year 5	$14.60 per kW-month
Year 6	Schedule B

Under some circumstances (i.e. Participating Members whose 1991 Project Demand Payment is zero), the Billing Demand Charge under this Schedule B-6 may exceed the applicable rates for demand related charges to the Member under Schedule B. Therefore, the Member may choose at any time during the term of this Rate Schedule B-6 to change the rate applied to this incremental load to be consistent with the charges under Rate Schedule B. The Member shall give the Agency a minimum of 30 days notice in advance of the date that the Member wants to have the rate changed to the applicable demand charges under Rate Schedule B.

(b) **Billing Energy Charge.** For each month, the energy usage of the Participating Member's qualifying economic development customer(s) will be treated in the same manner as all other energy usage by the Participating Member and its customers, and will be included in and billed as a part of the Participating Member's billing energy under Schedule B of the Power Sales Contract.

(c) **Changes in Billing Rates.** Changes, additions or deletions to this Economic Development Rate Schedule will be considered on an annual basis, and may be adopted upon approval of the Board of Directors. Such changes will not affect those economic development customers previously approved by the Agency except for rate changes.

5. **Billing Demand.** Each month, the Participating Member shall provide to the Agency a list showing the name of each customer it is serving under the provisions of this Economic Development Rate Schedule and the hourly demands supplied to each such customer in a form acceptable to the Agency. The billing demand will be computed as the demand in kilowatts of the Participating Member's qualifying customer(s) coincident with the Participating Member's billing demand under Schedule B of the Power Sales Contract. The total demand supplied to all such customers shall be adjusted to account for transformer losses if applicable and the aggregate amount shall be the total demand.

6. **Schedule B.** The Participating Member's total demand requirements for each month shall be reduced by the amount of coincident demand supplied under this Schedule B-6 to determine the Billing Demand under Schedule B.

7. **Notice.** Each Participating Member with a qualifying economic development customer shall give written notice to the Agency at least thirty (30) days in advance of the commencement of service to any new electric load to be served under this Schedule B-6 and shall commence service hereunder only after having received written approval therefore from the Agency staff and all metering as required by the Agency has been placed in service by the Participating Member at its expense.